EUROTHERM
DRIVES

620 Standard
620 Com
620 Link

Product Manual

HA463584 Issue 5

Compatible with Version 4.x Software

© Copyright Eurotherm Drives Limited 1999

All rights strictly reserved. No part of this document may be stored in a retrieval system, or transmitted in any form or by any means to persons not employed by a Eurotherm group company without written permission from Eurotherm Drives Ltd.

Although every effort has been taken to ensure the accuracy of this document it may be necessary, without notice, to make amendments or correct omissions. Eurotherm Drives cannot accept responsibility for damage, injury, or expenses resulting therefrom.

WARRANTY

Eurotherm Drives warrants the goods against defects in design, materials and workmanship for the period of 12 months from the date of delivery on the terms detailed in Eurotherm Drives Standard Conditions of Sale IA058393C.

Eurotherm Drives reserves the right to change the content and product specification without notice.

INTENDED USERS

This manual is to be made available to all persons who are required to configure, install or service the equipment described herein or any other associated operation.

Safety Information

Warning

Only qualified personnel who thoroughly understand the operation of this equipment and any associated machinery should install, start-up or attempt maintenance of this equipment. Non-compliance with this warning may result in personal injury and/or equipment damage.

Never work on any control equipment without first isolating all power supplies from the equipment.

The drive motor must be connected to an appropriate safety earth. Failure to do so presents an electrical shock hazard.

This equipment contains high value capacitors. Allow five minutes for capacitors to discharge prior to removing equipment covers. Failure to do so presents an electric shock hazard.

Caution

This equipment was tested before it left our factory. However, before installation and start-up, inspect all equipment for transit damage, loose parts, packing materials etc.

This product conforms to IP20 protection. Due consideration should be given to environmental conditions of installation for safe and reliable operation.

Never perform high voltage resistance checks on the wiring without first disconnecting the product from the circuit being tested.

Static Sensitive

This equipment contains electrostatic discharge (ESD) sensitive parts. Observe static control precautions when handling, installing and servicing this product.

THESE WARNINGS AND INSTRUCTIONS ARE INCLUDED TO ENABLE THE USER TO OBTAIN THE MAXIMUM EFFECTIVENESS AND TO ALERT THE USER TO SAFETY ISSUES

APPLICATION AREA: Industrial (non consumer) "Motor speed control utilising AC induction or synchronous motors"

PRODUCT MANUAL: This manual is intended to provide a description of how the product works. It is **not** intended to describe the apparatus into which the product is installed.

This manual is to be made available to all persons who are required to design an application, install, service or come into direct contact with the product.

APPLICATIONS ADVICE: Applications advice and training is available from Eurotherm Drives Ltd.

Safety Information

INSTALLATION: Ensure that mechanically secure fixings are used as recommended.

Ensure that cooling and air flow around the product are as recommended.

Ensure that cables and wire terminations are as recommended and clamped to required torque.

Ensure that the installation and commissioning of this product are carried out by a competent person.

Ensure that the product rating is not exceeded.

CAUTION: When power is removed from the product it must not be re-applied for a period of 30 seconds to allow the inrush limit circuit to operate correctly.

APPLICATION RISK: The integration of this product into other apparatus or system is not the responsibility of Eurotherm Drives Ltd as to its applicability, effectiveness or safety of operation or of other apparatus or systems.

Where appropriate the user should consider some aspects of the following risk assessment.

RISK ASSESSMENT: Under fault conditions or conditions not intended.

1. The motor speed may be incorrect.
2. The motor speed may be excessive.
3. The direction of rotation may be incorrect.
4. The motor may be energised (unless the installation specifically prevents unexpected or unsequenced energisation of the motor).

In all situations the user should provide sufficient guarding to prevent risk of injury and/or additional redundant monitoring and safety systems.

NOTE: During power loss the product will not operate as specified.

MAINTENANCE: Maintenance and repair should only be performed by competent persons using only the recommended spares (or return to factory for repair). Use of unapproved parts may create a hazard and risk of injury.

WHEN REPLACING A PRODUCT IT IS ESSENTIAL THAT ALL USER DEFINED PARAMETERS THAT DEFINE THE PRODUCT'S OPERATION ARE CORRECTLY INSTALLED BEFORE RETURNING TO USE. FAILURE TO DO SO MAY CREATE A HAZARD AND RISK OF INJURY.

PACKAGING: The packaging is combustible and if disposed of in this manner incorrectly may lead to the generation of toxic fumes which are lethal.

WEIGHT: Consideration should be given to the weight of the product when handling.

REPAIRS: Repair reports can only be given if sufficient and accurate defect reporting is made by the user.

Remember, the product without the required precautions can represent an electrical hazard and risk of injury, and that rotating machinery is a mechanical hazard and risk of injury.

PROTECTIVE INSULATION:

1. All exposed metal insulation is protected by basic insulation and bonding to earth i.e. Class 1.
2. NOTE: Earth bonding is the responsibility of the installer.
3. All signal terminals are SELV, i.e., protected by double insulation (Class 2). The purpose of this protection is to allow safe connection to other low voltage equipment and is not designed to allow these terminals to be connected to any unisolated potential. Ensure all wiring rated for highest system voltage.

NOTE: Thermal sensors contained within the motor are to be double insulate.

WALL MOUNTING: To maintain compliance with the European Low Voltage Directive standards VDE 0160 (1994)/EN50178(1998) only units supplied and fitted with the NEMA 1 top cover are to be mounted on the wall.

RCDs: Compatible with Type B RCDs only.

Cont.4

How to Use this Manual

This manual provides information to support the installation and operation of the 620 Vector Drive. A description of each of the chapters is given here to assist in locating and using the information contained within the manual.

CHAPTER 1 - PRODUCT OVERVIEW

This chapter contains a brief description of the drive including a technical specification of the equipment. The purpose of this chapter is to familiarise the reader with the purpose and scope of the equipment.

CHAPTER 2 - PRE-INSTALLATION PLANNING

This chapter contains a functional description of the equipment, wiring information and a description of the signals on the input/output terminals. The purpose of this chapter is to allow the user to understand the function of the equipment and to assist in designing a particular installation configuration.

CHAPTER 3 - INSTALLATION PROCEDURE

This chapter contains information regarding the physical mounting arrangements, cable and fuse selection as well as information regarding EMC installation. The purpose of this chapter is to provide guidelines for the safe and efficient installation of the equipment. The theory of, and requirement for, dynamic braking is also explained within this chapter.

CHAPTER 4 - SETTING UP AND COMMISSIONING

A description of the user adjustments and switch settings to configure the drive for a particular application. The purpose of this chapter is to guide the user through pre- and post-power on checks and provide running performance adjustment procedures. Information is also provided on the function and set-up of operational parameters using the Man-Machine Interface (MMI).

CHAPTER 5 - FUNCTION BLOCKS

This section provides reference information for the more advanced programming capabilities of the 620 Vector series controllers.

Each section describes a particular functional area and the associated menu options which are used to alter the parameters. Where appropriate, a functional block diagram illustrates the how the function blocks operate. Reference to the Functional Description and Microprocessor Block Diagram in Chapter 2 may be of assistance in understanding the relationship between these functional diagrams.

CHAPTER 6 - DIAGNOSTICS AND FAULT FINDING

A description of the procedures to diagnose and trace faults on the equipment. The purpose of this chapter is to guide the user through the on-board diagnosis and fault finding facilities, using the MMI diagnostic and alarm display.

CHAPTER 7 - EMC AND THE 'CE' MARK

This chapter sets out Eurotherm Drives Limited responsibilities to the recent European 'EMC, low voltage and machinery' Directives, and explains how Eurotherm are assisting their customers in achieving conformance. The north American requirements are also discussed.

CHAPTER 8 - SERVICING

This chapter provides the routine maintenance and repair procedures. The purpose of this chapter is to assist returning the controller to service following a fault condition.

CHAPTER 9 - APPENDICES

Appendix A contains advanced tuning notes.

Appendix B contains MMI Listing

Appendix C contains Tags by Number and Text String

Cont.6

Contents

Contents *Page*

Chapter 1 PRODUCT OVERVIEW

INTRODUCTION 1-1
Division of Information 1-1
GENERAL DESCRIPTION 1-1
PRODUCT RANGE 1-1
Optional Equipment 1-2
COMPONENT IDENTIFICATION 1-2
TECHNICAL SPECIFICATION 1-3
General 1-3
Protection 1-3
Diagnostics and monitoring 1-3
Inputs and Outputs 1-3
Electrical Ratings - Power Circuit 1-4
Electrical Ratings - Control Circuit 1-5
Supplies 1-5
Analogue I/O 1-5
Digital Inputs 1-5
Digital Outputs 1-5
Pilot Output 1-6
Encoder Inputs 1-6
Encoder Supply Output 1-6
Serial Interface 1-6
Mechanical Details 1-7
620 TYPE 4 1-7
620 TYPE 5 1-7
620 TYPE 6 1-8
620 TYPE 7 1-8
ENCLOSURE 1-8
EMC Specification 1-8
HIGH POWER AC 1-9
Special Considerations For Installations Requiring
Compliance with UL Standards 1-10
Environmental Requirements 1-11
Product Code 1-11
Example Code: 1-13

Contents

Contents *Page*

Chapter 2 PRE-INSTALLATION PLANNING

INTRODUCTION 2-1
FUNCTIONAL OVERVIEW 2-1
Control Circuits and Software 2-1
Power Circuits 2-1
Dynamic Braking.....2-1
Built-in diagnostics 2-1
INSTALLATION WIRING DIAGRAMS 2-4
Full Installation.....2-5
Differences between Drives.....2-5
TERMINAL DESCRIPTIONS.....2-7
Control Board Terminals 2-7
DIP Switches.....2-11
Power Terminals.....2-11
620 Type 4 2-12
620 Type 5 2-13
620 Type 6 .....2-**Error! Bookmark not defined.**
620 Type 7 2-15
EMC 2-15
TERMINATIONS 2-16

Chapter 3 INSTALLATION PROCEDURE

INTRODUCTION 3-1
INSTALLATION PRECAUTIONS.....3-1
MECHANICAL INSTALLATION.....3-1
Mounting 3-1
Ventilation.....3-1
ELECTRICAL INSTALLATION 3-3
Power Wiring 3-3
Minimum Cable Diameters and Supply Protection 3-4
Earthing 3-5
Model 620 Type 4 and Type 5 Series 3-5
Model 620 Type 6 and Type 7 Series 3-8
Control Wiring 3-9
DYNAMIC BRAKING 3-9
Introduction.....3-9
Brake Resistor Selection 3-10
Brake Resistor Specification.....3-11
Specification of the Dynamic Braking Switch 3-12

Contents

Contents *Page*

Type 8, 9 and 10 Brake Unit Rating 3-13
Brake Resistor Selection - Further notes. 3-13
Calculating Power Dissipation 3-13
Series/parallel Networks 3-15
Resistor Voltage Ratings 3-15
EMC INSTALLATION GUIDELINES 3-16
Introduction 3-16
EMC Filters to Reduce Line Conducted Noise 3-16
Interaction With Earth-fault Monitoring Systems and Safety Considerations 3-22
Minimising Radiated Emissions 3-22
Screening and Earthing When Mounted in an Enclosure 3-23
Screening and Earthing When Wall Mounted 3-25
Motor Cable-length Limitations 3-25
Other Layout Considerations 3-26

Chapter 4 SETTING-UP AND COMMISSIONING

INTRODUCTION 4-1
PHYSICAL DESCRIPTION 4-1
MAN-MACHINE INTERFACE (MMI) 4-1
Display and Menu 4-1
Definition of terms 4-1
Function Keys 4-2
Command Keys 4-3
Summary of MMI Keys 4-4
Status LEDs 4-4
NAVIGATING THE MMI MENU STRUCTURE 4-4
Menu Structure 4-6
Configure Drive 4-6
Diagnostics 4-6
Set-up Parameters 4-6
Password 4-6
Alarms 4-6
Menus 4-6
Parameter Save 4-6
Serial Links 4-6
System 4-6

Contents

Contents *Page*

SETTING-UP PROCEDURE....4-7
Setup Step 1 Before You Start....4-7
Setup Step 2 Ensure The Safety Of The Complete System....4-7
Setup Step 3 Prepare To Energise....4-7
Setup Step 4 Power On....4-8
Initial Setup....4-8
Setup Step 5 Run the drive....4-9
Setup Step 6 Autotuning the Drive....4-10
Reset To Factory Defaults....4-10
Change Stack Size....4-11

Chapter 5 FUNCTION BLOCKS

SET-UP PARAMETERS....5-1
Introduction....5-1
Ramps....5-3
Op-station....5-5
Aux. I/O....5-6
Remote Sequencing....5-7
Jog....5-8
Raise Lower Ramp....5-9
Inverse Time....5-10
Stop Rates....5-10
Alarms....5-13
Calibration....5-14
Torque Loop....5-15
Speed Loop....5-18
Autotune....5-21
Setpoint Sum 1- 3....5-22
Reference Encoder....5-24
PID....5-28
Preset Block....5-31
S-Ramp....5-32
Home....5-34
Operators....5-35
SERIAL LINK....5-45
P3 Port....5-45
P1 Port....5-45
Port P3....5-45
File Transfer....5-46

Contents

Contents *Page*

EI-ASCII 5-48
Summary of EI-Bisync 5-48
MESSAGE FORMAT 5-52
5703 SUPPORT 5-56
P1 Port 5-59
PASSWORD 5-60
ALARM STATUS 5-61
MENUS 5-61
PARAMETERS SAVE 5-61
SYSTEM/SOFTWARE INFO 5-62
SOFTWARE 5-62
SYSTEM/PERSISTENT DATA 5-62
SYSTEM / CONFIGURE I/O 5-63
ANALOGUE INPUTS 5-63
ANALOGUE OUTPUTS 5-64
INPUTS 5-65
DIGITAL OUTPUTS 5-66
CONFIGURE 5703 5-67
BLOCK DIAGRAM 5-67
INTERNAL LINKS 5-68

Chapter 6 DIAGNOSTICS AND FAULT FINDING

INTRODUCTION 6-1
Speed Feedback 6-4
Alarm Status :: First Alarm, Alarm Status :: Health Store and
Alarm Status :: Health Store. 6-4
Alarm Error Codes 6-5
Calibration Error Messages 6-5
Autotune Errors 6-6
ALARMS 6-7

Contents

Contents *Page*

Chapter 7 THE EUROPEAN DIRECTIVES AND THE 'CE' MARK

CEMEP....7-1
EMC DIRECTIVE....7-1
'CE' EMC Responsibility....7-1
Consideration of EMC Environment....7-3
Filter Selection....7-4
Filter Installation....7-4
Specification of Achievable EMC Emission and Immunity....7-4
EMC Responsibility of MANUFACTURERS/SUPPLIERS/INSTALLERS....7-5
Eurotherm Guide....7-5
EC Declaration of Conformity for EMC....7-6
Manufacturers EMC Declaration....7-7
Machinery Directive....7-8
EC Declaration of Conformity for Electrical Safety....7-9

Chapter 8 SERVICING

ROUTINE MAINTENANCE....8-3
REPAIR....8-3
RETURNED MATERIAL....8-3
EUROTHERM DRIVES COMPANIES....8-4
OVERSEAS COMPANIES....8-4

Chapter 9 APPENDICES

APPENDIX A....9-1
Brake Motors....9-1
Using Line Chokes....9-1
Using Motor Chokes....9-1
Using Multiple Motors On A Single Drive....9-1
Current Loop Gain....9-2
Diagnostic Test Pins....9-3
APPENDIX B - 620 MMI LISTING....9-4
APPENDIX C - TAGS....9-8
TAGS by Number....9-9
TAGS by MMI Text String....9-18

Chapter 1 Product Overview

INTRODUCTION

This manual provides the necessary information to plan, install and commission the 620 Vector series drives.

IMPORTANT: Motors used must be suitable for inverter duty.

Division of Information

This manual comprises eight chapters, plus appendices.

- Chapter 1 summarises the 620 Vector drive's electrical and mechanical specifications.
- Chapter 2 covers the planning required prior to installing a 620 Vector drive.
- Chapter 3 describes the mechanical and electrical procedures for installing a 620 Vector drive.
- Chapter 4 shows how to commission an installation and how to adapt the 620 Vector drive to the motor/application.
- Chapter 5 describes the function blocks.
- Chapter 6 lists the diagnostic facilities built into the drive.
- Chapter 7 EMC and the 'CE' mark, explains how Eurotherm are assisting their customers in achieving European conformance.
- Chapter 8 contains routine maintenance and repair information.
- Chapter 9 Appendices.

This manual contains the information required to set up a motor drive system which automatically tunes itself to the motor and provides control of speed, ramp up and down times and similar functions. The 620 Vector series provides a further host of sophisticated programming options as standard.

GENERAL DESCRIPTION

The 620 Vector drive allows high performance speed control of AC asynchronous induction motors fitted with an encoder. It is available with a range of power ratings in three variants:

620STD STANDARD for use in systems incorporating analogue setpoints and logic control systems.

620COM As above with the addition of a Serial port for use in Eurotherm Drives serial protocols and a reference encoder input for phase control applications.

620L As above with the addition of a Link co-processor, LINK fibre optic ports for use in Eurotherm Drives LINK fibre-optic based networks. This drive is programmed using ConfigEd Release 4.0+ available and documented separately.

This manual only covers the 620Std and the hardware / software differences for the 620. For more information on the 620L refer to Link documentation.

PRODUCT RANGE

The 620 is available in four chassis types as follows:

CHASSIS	POWER (208 to 240 volts)	POWER (380 to 460 volts)
TYPE 4	0.75 - 4.0kW;	0.75 - 7.5kW
TYPE 5	5.5 - 7.5kW;	1.0 - 15.0kW
TYPE 6	11 - 18kW;	8.0 - 37.0kW
TYPE 7	22 - 37kW;	5.0 - 75.0kW
TYPE 8*		90 - 132kW
TYPE 9		160 - 200kW
TYPE 10		250 - 280kW

Table 1.1 620 Vector Drive variants

The 620 models are housed in chassis of similar appearance with a 32 character Man-Machine Interface (MMI) - an alphanumeric display utilising multi-level menus to present all parameters, diagnostics and alarms (refer to

* Documented separately in HA463284 584s/620 Type 8,9,10 Manual Addendum

Figure 1.1). The chassis size increases with power rating. The models are further identified by the product code, refer to "**PRODUCT CODE**" in this chapter.

Optional Equipment

The following equipment options are available for the 620 Vector Drives:

1. Dynamic Braking Module (fitted internally). This is a factory fitted option and usually fitted as standard
2. UL Type 1 Top Cover.
3. Glandbox.

COMPONENT IDENTIFICATION

This manual refers to various connector terminals within the equipment which are accessible to the user for installation purposes. An exploded view of a 620 Vector Drive is shown in Figure 1.1.

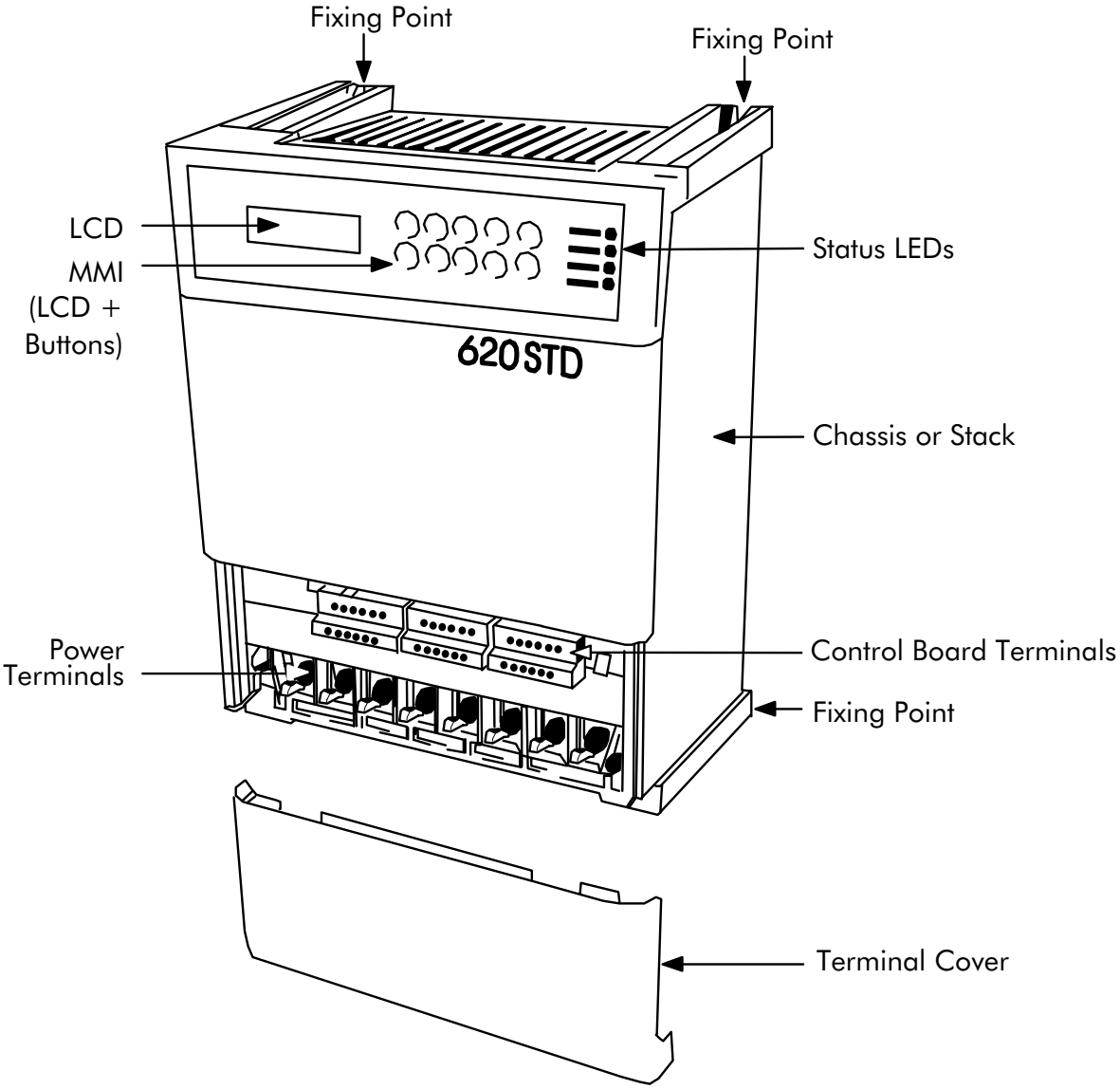

Figure 1.1 - 620 Vector Drive Exploded View

TECHNICAL SPECIFICATION

The following paragraphs provide technical information regarding the features and performance characteristics of the 620 Vector Drives.

General

The MMI display menus provides full access to all the drive's parameters.

Output Frequency	0-240Hz (for higher frequencies contact Eurotherm Drives Technical Support).
Switching Frequency	5 or 3kHz depending on type
Preset Speeds	8
Overload rating	150% for 60s
Speed control range	0-8 x base speed, 1000:1 of max. speed
Speed control precision	± 0.01% steady state of max. setpoint (digital setpoint) ± 0.1% steady state of max. setpoint (analogue setpoint).
Speed ref. resolution	± 0.01% digital ± 0.025% analogue (12 bit)
Stopping Modes	Ramp, Fast stop, Coast

Protection

The 620 Vector series drives will trip under the following conditions:

- Short circuit line - line
- Short circuit line - earth
- Earth fault
- Overcurrent >220%
- Overvoltage
- Undervoltage
- Stall
- Overspeed
- 5703 repeater error
- External trip
- Heatsink overtemperature
- Motor thermistor overtemperature

Diagnostics and monitoring

Full diagnostics/monitoring is provided by the MMI display and status LEDs.

Inputs and Outputs

The following range of inputs and outputs are provided:

- 5 Analogue Inputs (4 programmable)
- 2 Analogue Outputs (both programmable)
- Digital Inputs (24V DC) for Run, Fast Stop, Coast Stop, Jog, Enable, Ramp Hold, Preset 1, 2, and 3 (the last 4 inputs are programmable.
- Three programmable digital outputs are provided (24V DC).
- A 24V DC supply is available for interfacing external digital inputs.
- A +10V and -10V DC supply is available for interfacing external analogue inputs.
- 2 or 4 wire RS-485 serial communications.

Electrical Ratings - Power Circuit

Input Voltage 380V to 460V* ±10%, 50/60Hz

	TYPE 4							TYPE 5		TYPE 6				TYPE 7		
Power (kW)	0.75	1.1	1.5	2.2	4.0	5.5	7.5	11	15	18	22	30	37	45	55	75
Input Current (A)	3.0	4.5	6.0	8.0	11	15	18.0	25	31	40	46	61	72	91	110	150
Output Current (A)	2.3	3.3	4.5	6.3	9.4	13	16	24	30	39	46	61	72	91	110	150
Input power factor	0.95					0.86										
Input Fuse/(Circuit Breaker) (A)	10				15	20		40[1]	40[1]	50[1]	63[1]	100[1]	125[1]	160[1]	200[1]	
Approx. loss (W)	60	70	85	110	150	200	250	350	400	550	630	820	1050	1300	1600	2200
Switching Frequency	5kHz													3kHz		

Input Voltage 208V to 240V* ±10%, 50/60Hz

	TYPE 4					TYPE 5		TYPE 6			TYPE 7		
Power (kW)	0.75	1.1	1.5	2.2	4.0	5.5	7.5	11	15	18	22	30	37
Input Current (A)	5.5	7.5	9.5	12	19	25	31	46	61	72	86	120	145
Output Current (A)	4.3	6	8	10.5	17	24	30	46	61	72	86	120	145
Input p.f.	0.95			0.86									
Input Fuse/(Circuit Breaker) (A)	10		15	20		40[1]	40[1]	63[1]	100[1]		125[1]	160[1]	200[1]
Approx. loss (W)	70	90	100	130	210	270	360	510	680	830	980	1300	1600
Switching Frequency	5kHz										3kHz		

Common data

	TYPE 4	TYPE 5	TYPE 6	TYPE 7
Output Voltage (max)	Input Voltage			
Output Overload	150% for 60s			
Output Frequency	0 to 240Hz			
Ambient Operating Temperature Range	0 to 50°C 0 to 40°C for 2.2kW (380 - 460V)			
UL Type 1	0 to 40°C			
Earth Leakage Current	> 50mA AC. Permanent Protective Earthing Required			

(Suitable for earth referenced (TN) and non earth referenced (IT) supplies.)*

Table 1-2 - 620 Electrical Specifications

Note:-

[1] For installations requiring UL compliance, short circuit protection Semiconductor Fuses should be installed in the 3-phase supply to the 620 products. These fuses are suitable for branch circuit short-circuit protection of the solid-state motor controllers only. For installations NOT requiring UL compliance, use class"T" fuses or a circuit breaker.

Electrical Ratings - Control Circuit

The following ratings relate to all 620 variants.

Supplies

Reference Supplies (for all analogue inputs)	+10V ± 0.1V, 10mA max - 10V ± 0.1V, 10mA max
Supply (for all digital inputs)	+24V ± 10%, 200mA max. This is in addition to the digital outputs.

Table 1-3 Reference Inputs

Analogue I/O

	INPUT	OUTPUT
Impedance	100kΩ	Min load 3kΩ to 0v
Range	± 10V	± 10V
Resolution	12 bit (1 in 4096) + sign Approx. 2.5mV resolution	12 bit (1 in 4096) + sign
Sample Rate	Synchronous with block diagram Terminal C4 (Direct I/P) 1.1mS. (1.76mS for drive sizes 7 and upwards.)	Synchronous with block diagram
Current (max.)	1mA	3mA

Table 1-4 Analogue Interface Specification

Digital Inputs

Input voltage	Nominal 24V DC, Max. +30V DC
Input impedance	4k7Ω
Sample Rate	Synchronous with block diagram
Threshold	V low <+6V DC Typical +12V DC V_{in} high >+18V DC

Table 1-5 Digital Inputs

Digital Outputs

Digital outputs are open circuit when Off. The On specification is shown in Table 1-7.

On Voltage	+24V ±10%
Maximum On Current	50mA (Source)
Short Circuit Duration	Indefinite

Table 1-6 Digital Outputs

Pilot Output

Pilot output is an open collector output that is off while the drive is healthy. The specification is shown in Table 1-7.

Open Collector 0V to 24V	50mA (Current Sink).

Table 1-7 Pilot Output

Encoder Inputs

Input Voltage	-30V to +30V differential
Input Threshold Voltage	4V ± 1V DIL 7-12 switch on 9V ± 1V DIL 7-12 switch off
Input Current	10mA ± 3mA
Maximum Input Frequency	250kHz on each of A and B $MaxFreq = \frac{MaxSpeedRPM}{60} * NoOfLines$

Table 1-8 Control Terminal Specifications

Encoder Supply Output

Output Voltage	10 - 21V (0 to 200mA load) 16V ± 1V (Recommended load). The Output Voltage may be set by altering the variable "Setup Parameters::Calibration::Encoder Supply".
Recommended Load Current	50 - 200mA
Short Circuit Duration	Indefinite

Table 1-9 Encoder Supply Output Specifications

Serial Interface

Voltage Levels	RS-485
Isolation from other terminals	> 1MΩ
Max. withstand voltage to any other control terminal	30v RMS

Table 1-10 Encoder Supply Output Specifications

Mechanical Details

The mechanical details of all the 620 vector series controllers are shown in Tables 1-11 to 1-14. The general layout of the cases is shown in Chapter 3.

620 TYPE 4

DIMENSIONS	Refer to figure 3.1
MOUNTING ORIENTATION	Vertical
WEIGHT	8kg max.
AIR FLOW CLEARANCE	Refer to figure 3.1
POWER TERMINATIONS	M5 slotted screws. Tightening torque 2.5Nm (22.1lb-in, 1.8lb-ft).
EARTH (GROUND) TERMINATIONS	**Gland box not fitted:** 2 x M4 bolt and washer, tightening torque 1.3Nm (11.5lb-in, 0.9lb-ft) and M5 slotted screw and washer, tightening torque 2.5Nm (22.1lb-in, 1.8lb-ft). **Gland box fitted:** 2 x M5 stud, nut and washer, tightening toque 2.5Nm (22.1lb-in, 1.8lb-ft) and M5 slotted screw and washer, tightening torque 2.5Nm (22.1lb-in, 1.8lb-ft).
CONTROL TERMINATIONS	Removable screw connectors for 0.75mm^2 wire. Terminals will accept up to 3.3mm^2 wire (12 AWG). Tightening torque 0.56-0.79Nm (5-7lb-in, 0.42-0.58lb-ft).
	Spring terminal connectors. Terminals will accept up to 0.8mm^2 wire (18 AWG).

Table 1-11 620 type 4 mechanical details

620 TYPE 5

DIMENSIONS	Refer to figure 3.1
MOUNTING ORIENTATION	Vertical
WEIGHT	12kg
AIR FLOW CLEARANCE	Refer to figure 3.1
POWER TERMINATIONS	M5 slotted screws. Tightening torque 2.5Nm (22.1lb-in, 1.8lb-ft).
EARTH (GROUND) TERMINATIONS	**Gland box not fitted:** 2 x M5 nut and washer, tightening torque 2.5Nm (22.1lb-in, 1.8lb-ft). **Gland box fitted:** 2 x M5 stud, nut and washer, tightening toque 2.5Nm (22.1lb-in, 1.8lb-ft).
CONTROL TERMINATIONS	Removable screw connectors for 0.75mm^2 wire. Terminals will accept up to 3.3mm^2 wire (12 AWG). Tightening torque 0.56-0.79Nm (5-7lb-in, 0.42-0.58lb-ft)
	Spring terminal connectors. Terminals will accept up to 0.8mm^2 wire (18 AWG).

Table 1-12 620 type 5 mechanical details

620 TYPE 6

DIMENSIONS	Refer to figure 3.1
MOUNTING ORIENTATION	Vertical
WEIGHT	31kg
AIR FLOW CLEARANCE	Refer to figure 3.1
POWER AND EARTH (GROUND) TERMINATIONS	Compact high current terminal blocks. Terminals accommodate wire range 0.8 - 53.5mm^2 (18 - 1/0 AWG). Tightening torque 3.4 - 5.6Nm (30 - 50lb-in, 2.5 - 4.2lb-ft).
CONTROL TERMINATIONS	Removable screw connectors for 0.75mm^2 wire. Terminals will accept up to 3.3mm^2 wire (12 AWG). Tightening torque 0.56 - 0.79Nm (5-7lb-in, 0.42-0.58lb-ft).
	Spring terminal connectors. Terminals will accept up to 0.8mm^2 wire (18 AWG).

Table 1-13 620 type 6 mechanical details

620 TYPE 7

DIMENSIONS	Refer to figure 3.1
MOUNTING ORIENTATION	Vertical
WEIGHT	83kg
AIR FLOW CLEARANCE	Refer to figure 3.1
POWER AND EARTH (GROUND) TERMINATIONS	(a) Supply (L1-3), Motor (M1-3), Brake (DB1,2) terminals: Compact high current terminal blocks. Terminals accommodate wire range 33.6-107.2mm^2 (2-4/0 AWG) Tightening torque 20Nm (175lb-in, 14.6lb-ft). (b) D.C. interconnection terminals (DC+, DC-): Compact high current terminal blocks. Terminals accommodate wire range 33.6-152mm^2 (2AWG-300kcmil (MCM)) Tightening torque 30.5Nm (270lb-in, 22.5lb-ft) (c) Earth (ground) ⏚ : Compact high current terminal blocks. Terminals accommodate wire range 33.6-107.2mm^2 (2-4/0 AWG) tightening torque 22.6Nm (200lb-in, 16.7lb-ft).
CONTROL TERMINATIONS	Removable screw connectors for 0.75mm^2 wire . Terminals will accept up to 3.3mm^2 wire (12 AWG). Tightening torque 0.56-0.79Nm (5-7lb-in, 0.42-0.58lb-ft).
	Spring terminal connectors. Terminals will accept up to 0.8mm^2 wire (18 AWG).

Table 1-14 620 type 7 mechanical details

ENCLOSURE

IP20 (as standard), to be built into a suitable cubicle.
IP40 (with UL Type 1 top cover) Type 4,5,6 and 7 only, suitable for wall mounting in Europe.

EMC Specification

Refer to Chapter 7.

HIGH POWER AC (types 8, 9 and 10)

HPAC Product Manual HA463284 details the technical specification of these builds, the following is for information only.

Electrical Ratings - Power Circuits (620 Constant Torque)

	TYPE 8			TYPE 9			TYPE 10	
Input Voltage	380V to 460V [1] ±10%, 50/60Hz							
Product Code Block 2	0900	1100	1320	1600	1800	2000	2500	2800
Nominal Motor Power (kW) @ 380V	90	110	132	160	180	200	250	280
Nominal Motor Power (kW) @ 415/440V	90	110	150	185	200	220	280	315
Motor Power (Hp) @ 460V (as specified within NEC/NFPA-70)	150	150	200	250	300	300	400	450
Output Current (A)	180	216	250	316	361	375	480	520
Input Current (A) [2][3]	180	220	260	320	360	400	490	550
Fundamental Input Power Factor	0.95							
Input Bridge I^2t	245 000 A^2s			813 000 A^2s				
Fuse Rating/Circuit Breaker [4](A)	200	250	300	350	400	450	550	600
Approx. loss @ 3kHz (kW)	2.4	2.9	3.5	4.3	4.8	5.4	6.7	7.5
Switching Frequency	3kHz							
Output Voltage (max)	Input Voltage							
Output Overload	150% for 60 seconds							
Output Frequency	0 to 120Hz							
Fan Inlet temperature Range	0 to 40°C							
IP Rating	IP20 Enclosure IP00 power terminals							
Earth Leakage Current	>>100mA. Product must be permanently earthed							

Table 1-15

[1] Suitable for earth referenced (TN) and non earth referenced (IT) supplies

[2] **IMPORTANT: 3% line impedance MUST be provided for each module**, and is assumed in the quoted input current values. Failure to do so will severely curtail DC link capacitor lifetime and could result in damage to the input bridge.

[3] Input current quoted is for 380V supply at the stated motor power. Motor efficiency of 93% is assumed

[4] Short circuit protection Semiconductor Fuses should be installed in the 3-phase supply to the drive module to protect the input bridge. Circuit breakers or HRC fuses will not protect the input bridge.

Special Considerations For Installations Requiring Compliance with UL Standards

Motor Overload Protection

An external motor overload protective device must be provided by the installer.

Motor overload protection is provided in the controller by means of the thermal device in the motor winding. This protection cannot be evaluated by UL hence it is the responsibility of the installer and/or the local inspector to determine whether the overload protection is in compliance with the National Electrical Code or Local Code requirements.

Branch Circuit/Short Circuit Protection Requirements

Model 620 Type 4 Series

UL Listed (JDDZ) non-renewable cartridge fuses or UL Listed (JDRX) renewable cartridge fuses, rated 300Vac or 600Vac as appropriate (depending on the rated input voltage of the drive), must be installed upstream of the drive. For fuse current ratings, see Chapter 1 “Electrical Ratings - Power Circuit”.

Model 620 Type 5 and 6 Series

UL Recognized Component (JFHR2) semiconductor fuses must be installed upstream of the drive. For fuse current ratings, see Chapter 1 “Electrical Ratings - Power Circuit”. Refer to Table 1-16 below for recommended semiconductor fuse manufacturer and model numbers.

Fuse Current Rating	Bussmann Model No.
40A	170M3808
50A	170M3809
63A	170M3810
100A	170M3812
125A	170M3813

Table 1-16 - Bussmann International Fuses (Rated 660Vac)

Model 620 Type 7 Series

These devices are provided with solid state short circuit (output) protection. Branch circuit protection should be provided as specified in the National Electrical Code, NEC/NFPA-70.

Short Circuit Ratings

Model 620 Type 4, 5, 6 Series.

Suitable for use on a circuit capable of delivering not more than 5000 RMS Symmetrical Amperes, 240/460V maximum.

Model 620 Type 7 Series.

Suitable for use on a circuit capable of delivering not more than (the value shown in Table 1- 17) RMS Symmetrical Amperes, (the value of rated voltage shown in Table 1- 17)V maximum.

Output Rating - kW	Rated Voltage - V	Short Circuit Rating RMS Symmetrical Amperes
22 - 37	208 - 240	5,000
45 - 75	380 - 460	10,000

Table 1-17

Field Wiring Temperature Rating

Model 620 Type 4, 5, 6 Series - Use 60°C copper conductors only.

Model 620 Type 7 Series - Use 75°C copper conductors only.

Motor Base Frequency

The motor base frequency rating is 240Hz maximum.

Operating Ambient Temperature

For operating ambient temperature range, see “**Electrical Ratings - Power Circuit**” on page 1-4

Environmental Rating

Model 620 Type 4, 5, 6, 7 Series with a Product Code Block IV designation xx2x are suitable for direct wall-mounting as they have a “Type 1 Enclosure” rating.

In order to preserve this enclosure rating, it is important to maintain the environmental integrity of the enclosure. The installer must provide correct Type 1 closures for all unused clearance/knockout holes within the drive glandbox.

Additionally, in order to preserve the “Type 1 Enclosure” rating for 620 Type 7 models, the installer must ensure that the blanking plates are fitted to the ventilation apertures provided within the glandbox.

Environmental Requirements

The environmental limits for the 620 Vector series controllers are shown in Table 1-18.

Humidity (max.)	85% relative humidity (non-condensing) at 40°C
Altitude	Above 1000m derate power by 1% per 100m up to a maximum 5000m
Atmosphere	Non flammable, non corrosive and dust free (Pollution Degree 2)
Operating temperature range	0°C to 50°C 0°C to 40°C UL Type 1 option fitted
Storage temperature	Minimum -25°C to maximum +55°C
Transport temperature	Minimum -25°C to maximum +70°C
Enclosure	IP20 (direct conduit connection and UL Type 1 options)
Climatic Conditions	Class 3k3 as defined by EN50178 (1998)
Pollution Degree	2
Installation / Overvoltage Category	3

Table 1-18 620 Series environmental requirements

Product Code

All 620 units are fully identified using an eleven block alphanumeric code, as shown in figure 1-2. This code details the drive calibration and settings on despatch from the factory. The product code appears as the "Model No." on the rating label at the side of the unit.

Example Code	620STD	/0750	/400	/0010	/UK	/ENW	/0000	/000	/B1	/000	/000
Block Number	1	2	3	4	5	6	7	8	9	10	11

Figure 1-2 Product code blocks

Details of each block of the product code are given in Table 1-19.

Block No.	Variable	Description
1	620STD 620COM 620L 620ADV	620 Vector Standard 620 Vector Communications 620 Vector Link 620 Advance Drive (not available for new designs)
2		Four numbers specifying the power rating in kW
	0007	0.75 kW
	0011	1.1 kW
	0015	1.5 kW
	0022	2.2 kW
	0040	4.0 kW
	0055	5.5 kW
	0075	7.5 kW
	0110	11 kW
	0150	15 kW
	0180	18 kW
	0220	22 kW
	0300	30 kW
	0370	37 kW
	0450	45 kW (380-460V only)
	0550	55 kW (380-460V only)
	0750	75 kW (380-460V only)

Block No.	Variable	Description
3	230 400	Three numbers specifying the nominal input voltage rating 208 to 240V (±10%) 50/60Hz 380 to 460V (±10%) 50/60Hz
4	00xx 01xx-99xx xx1x xx2x xx3x xx5x xx6x xxx0	Four digits specifying the mechanical package including livery and mechanical package style First two digits: Livery Standard Eurotherm Drives livery Defined customer liveries Third digit: Mechanical packaging style Standard (IP20), protected panel mounting IP20 and falling dirt protection (UL Type1) with glandplate cable entry Enclosed (IP20), through panel mounting IP20 with falling dirt protection only IP20 with glandcable entry only Note: Option 3 applies to type 7 power ratings only. Fourth digit: Operator Station Standard product (always 0) - Built in MMI
5	UK US	Two characters specifying the user interface language These characters are the same as used for computer keyboard specifications: English 50Hz default English 60Hz default
6	ENW	Three characters specifying any feedback option installed over and above the standard features of the product, e.g. Encoder (Wire-ended)
7	0000 N/A	Four characters specifying the communications protocol and its hardware implementation method No communications options fitted Indicates the particular communications option
8	000 N/A	Three characters specifying any optional loaded software No software options loaded Indicates the particular software option
9	00 B0 B1	Two characters specifying the braking option Brake power switch not fitted Brake power switch fitted - no braking resistors supplied Brake power switch fitted and default value braking resistors supplied **(recommended)** Note: Extra braking resistors can be specified and ordered separately
10	000 TBA	Three characters specifying the aux supply required No aux supply option fitted Code for the filtering option installed
11	000 nnn	3 digits specifying engineering special options: No special options Code for the special engineering option installed

Table 1-19 - Product Code Block Descriptions

Example Code:

620STD/0750/400/0010/UK/ENW/0000/000/B1/000/000

This code indicates a drive, which is:

- a 620 Standard product
- 75kW power rating
- 380-460v input supply
- Eurotherm Drives livery
- Enclosed mechanical package (IP20)
- No additional optional operator station
- UK language
- Wire-ended 15V encoder option
- No optional communications
- No optional loaded software
- Brake switch fitted with default value resistors supplied
- No aux supply option fitted
- No special options.

Chapter 2 Pre-Installation Planning

INTRODUCTION

This chapter contains a functional description of the 620 Vector Drive to enable a sound understanding of the system, and notes for consideration prior to installation.

FUNCTIONAL OVERVIEW

The 620 Vector enables very high performance control of 3-phase AC induction motors fitted with a compatible encoder. It offers the user great system flexibility, allowing easy integration into various control schemes. The plain language Man-Machine Interface (MMI) greatly simplifies setting up and commissioning the 620 Vector.

A simplified block diagram of a 620 is shown in Figure 2.13. This illustrates the basic internal arrangement of the drive with the circuitry split between the control circuits and power circuits.

The control circuits are common to all types of the 620 Vector Drive.

Chassis types 5 and 7 use a slightly different power circuit from types 4 and 6. The general principles of operation remain the same, however.

Control Circuits and Software

The control circuits and software element contain the intelligence of the 620 Vector series. They comprise a sophisticated microprocessor system with digital and analogue inputs and outputs, the MMI and circuits to interface between the microprocessor and the inverter circuits.

Speed feedback signals from the motor shaft encoder are processed by the microprocessor to determine the rotational speed of the shaft. An PI algorithm within the software uses this information to produce varying gate drive signals to the inverter circuits. These signals cause the inverter to output the required voltage and frequency for a particular motor speed.

Analogue inputs to the microprocessor are digitised and can be used to set parameters such as speed.

Digital inputs to the microprocessor signal various commands and conditions such as stop, start and required direction of rotation.

Digital outputs from the microprocessor (e.g. Health) can be used by external control equipment.

A detailed block diagram of the logical blocks which comprise the control circuits and software is shown in Figure 2.13.

Power Circuits

The 3-phase supply input on terminals L1, L2 and L3 is rectified to give a DC output to the DC Link capacitors, which smooth the DC power. The DC power is fed to the inverter circuits, which convert the fixed voltage DC into three phase variable frequency and voltage drive outputs to the motor. The frequency and voltage are set by the gate drive signals from the microprocessor.

During motor deceleration or at other times when the motor acts as a generator, energy flows from the motor into the DC link capacitors and causes the DC link voltage to rise. The drive will trip if the DC link voltage rises above a pre-set level, to avoid damage to the drive.

Dynamic Braking

If the dynamic braking option is fitted, an external brake resistor is switched across the DC Link by the Dynamic Brake Switch to dissipate the excess energy and prevent the drive from tripping.

Chapter 3 describes the power and resistance rating requirements for the dynamic braking resistor.

Built-in diagnostics

Number and logic diagnostics are values and settings that can be displayed via the diagnostic menu within the MMI. These values are read-only and are provided for the user to determine operating or fault conditions. Refer to Chapter 6 for further information and descriptions of the diagnostics.

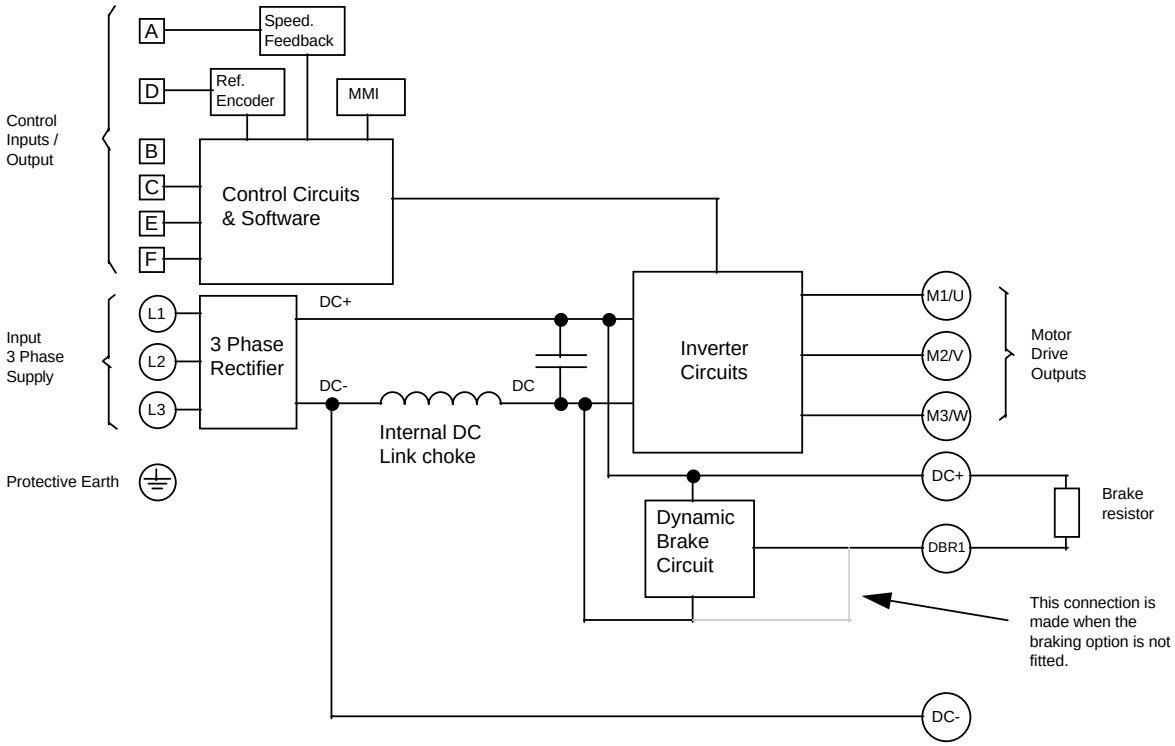

Figure 2.1 - Type 4 Simplified Block Diagram

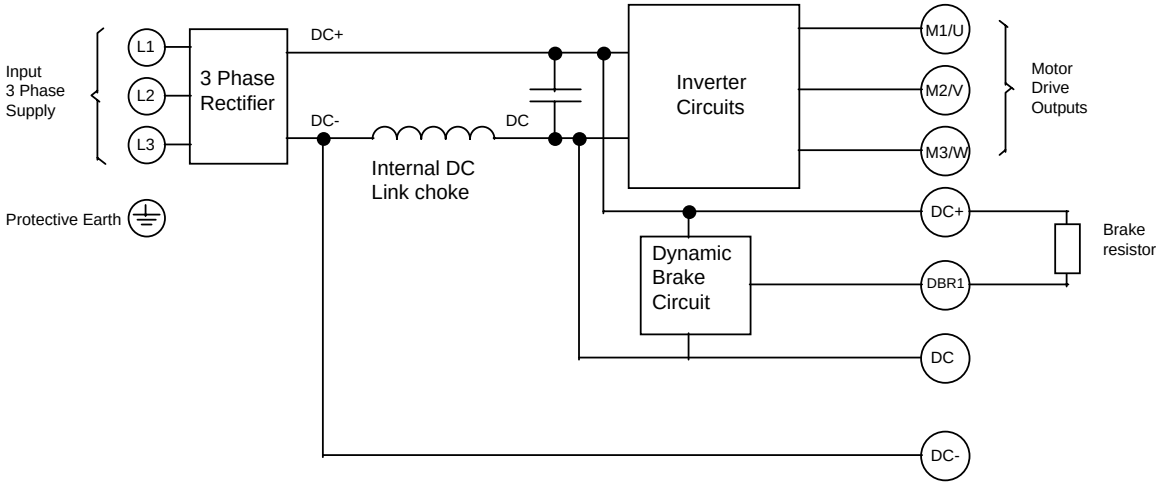

Figure 2.2 - Type 5 Simplified Block Diagram

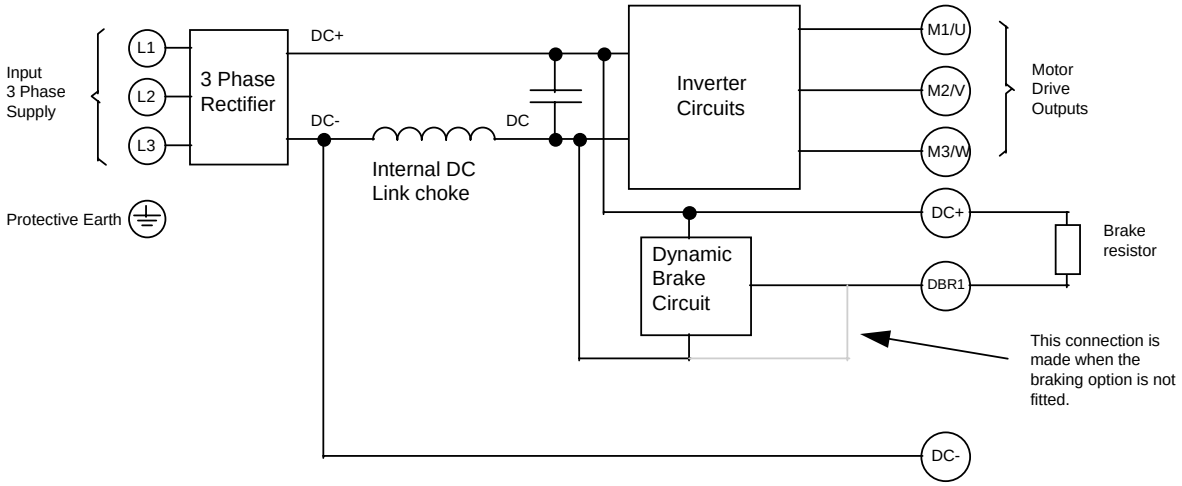

Figure 2.3 - Type 6 Simplified Block Diagram

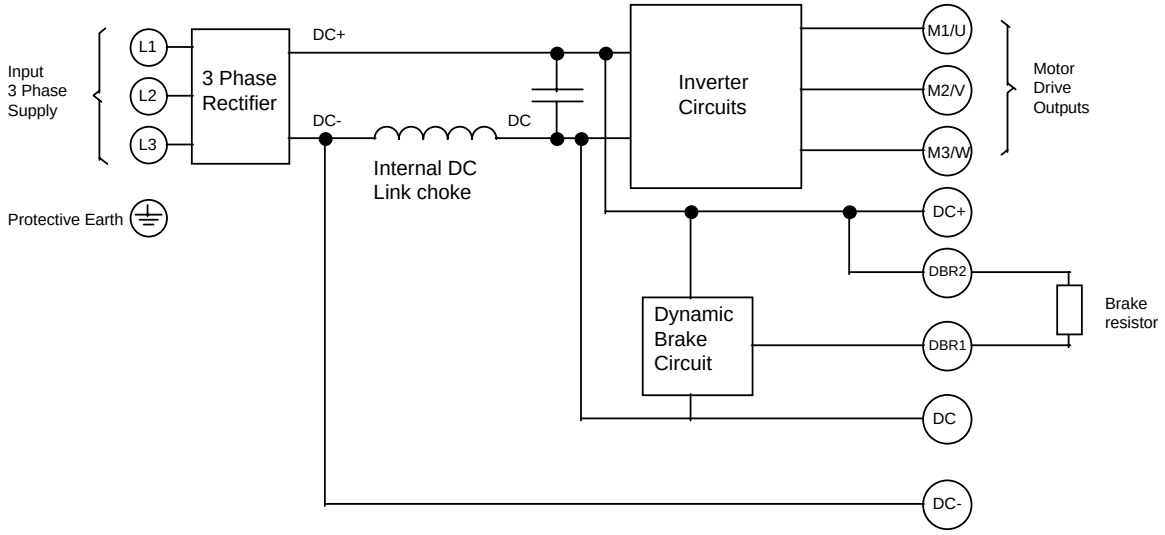

Figure 2.4 - Type 7 Simplified Block Diagram

INSTALLATION WIRING DIAGRAMS

This section shows all the necessary wiring details for connecting up a 620 Vector series drive.

Figure 2.5 shows the minimum configuration required for basic operation of the Drives.
Figure 2.6 shows a full connection diagram to utilise all the features of the Drives.

All the 620 Vector Drives are wired similarly. The main difference between the variants (other than power rating and physical size) is the capacity of the upstream circuit breaker (MCB1 in Figure 2.6) and the layout of the power terminals. The MCB details are listed in Table 2-1, and the power terminals are shown in Figures 2.9 to 2.12.

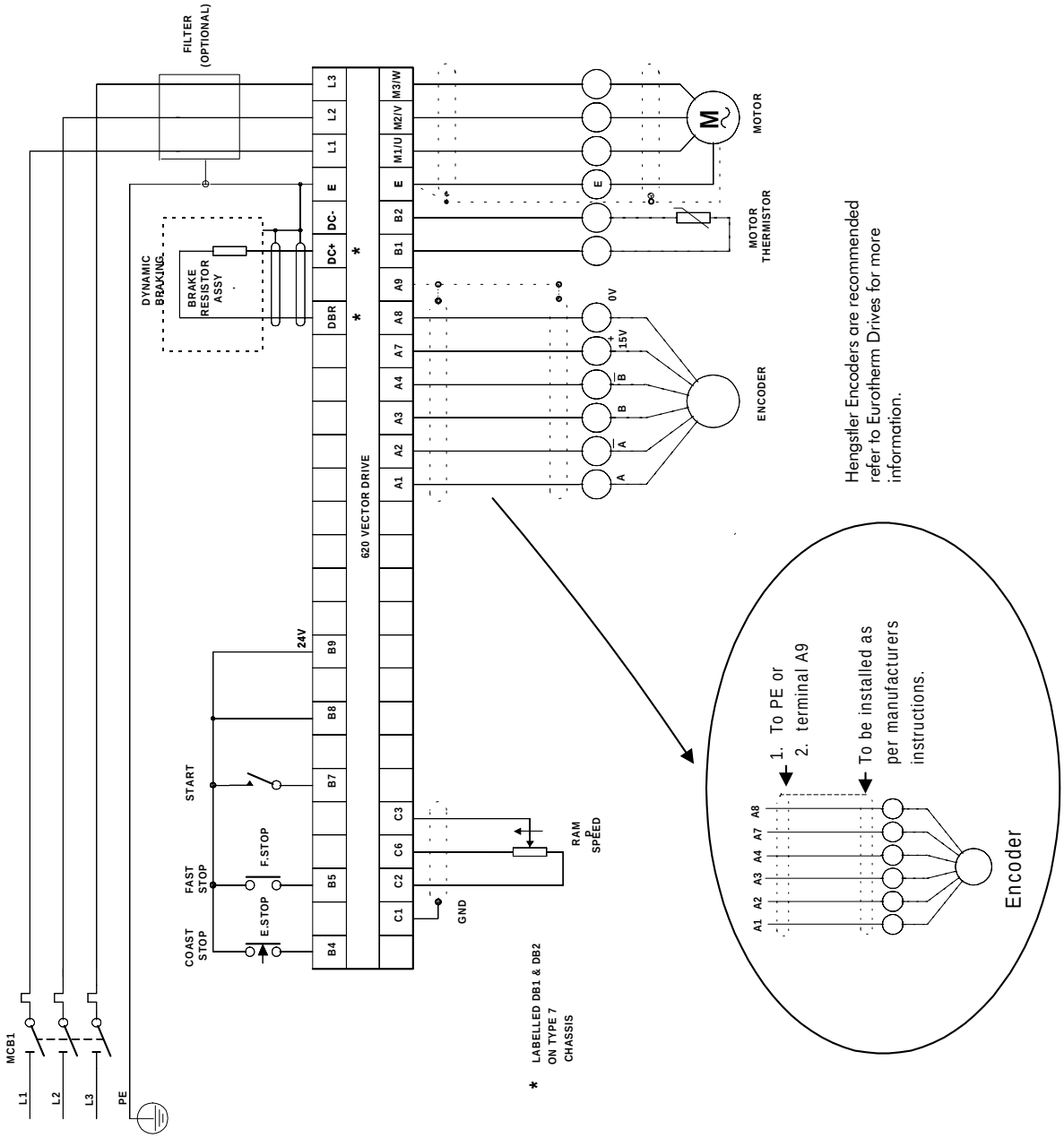

Figure 2.5 - Minimum wiring configuration for 620 series drives

Full Installation

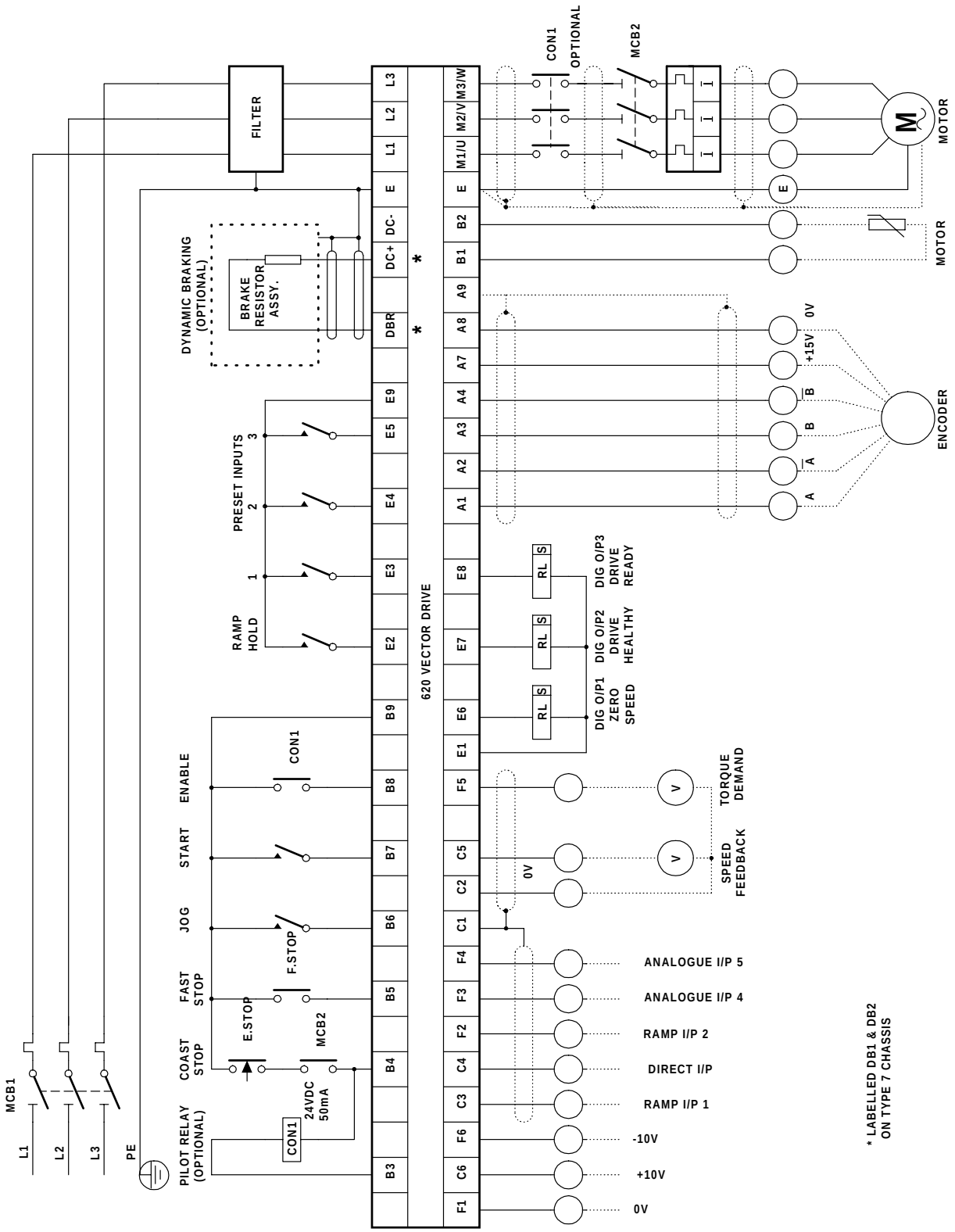

Figure 2.6 - Full wiring diagram for 620 series drives

Differences between Drives

Each of the drive variants requires different rating breakers for MCB1. The requirements are shown in Table 2-1. (Entries with N/A indicate that the drive rating is not available for that type at that voltage.)

MCB2 should be rated according to the full load current of the motor.

Table 2-1 MCB requirements

Type	Power (kW)	208-240v	380-460v
4	0.75	10 A	10 A
	1.1	10 A	N/A
	1.5	10 A	20 A
	2.2	20 A	10 A
	4.0	20 A	20 A
	5.5	N/A	20 A
	7.5	N/A	20 A
	5.5	30 A	N/A
5	7.5	40 A	N/A
	11.0	N/A	32 A
	15.0	N/A	40 A
6	11.0	63 A	N/A
	15.0	100 A	N/A
	18.0	N/A	50 A
	18.5	100 A	N/A
	22.0	N/A	63 A
	30.0	N/A	100 A
	37.0	N/A	100 A
7	22.0	125 A	N/A
	30.0	160 A	N/A
	37.0	200 A	N/A
	45.0	N/A	125 A
	55.0	N/A	160 A
	75.0	N/A	200 A

TERMINAL DESCRIPTIONS

Terminals are provided for both the control and power connections to allow reliable connections with external devices and power supplies. The function of these terminals is described in tables 2.2 to 2.7.

Control Board Terminals

The control board terminals are identical for all variants of the 620 Vector Drive. The layout of the control board terminals is given in Figure 2.8, and the functions are described in Table 2.5. See Chapter 1 "**ELECTRICAL RATINGS**" for control terminal specification.

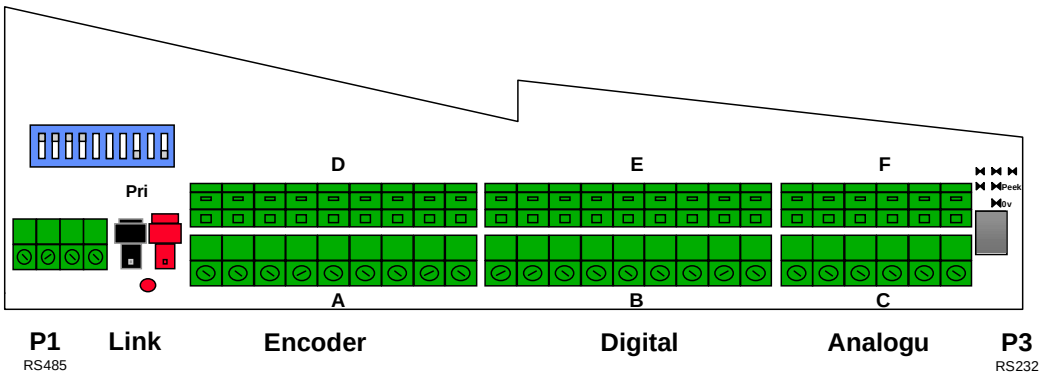

Figure 2.7 - Control Board Terminals

		Front / Lower	Back / Upper		
	P1 RS-485 Serial Port	1	N/A	Transmit -	
		2	N/A	Transmit +	
		3	N/A	Transmit - / Receive -	
		4	N/A	Transmit + / Receive +	
	Link Fibre Optics. (620L only)	Red	N/A	Transmit Primary	
		Black	N/A	Receive Primary	
	Feedback Encoder			**Reference Encoder (620Com & 620L only)**	
	A	1	1	A	
	/A	2	2	/A	
	B	3	3	B	
	/B	4	4	/B	
A	Z	5	5	Z	**D**
	/Z	6	6	/Z	
	Power (15v)	7	7	Power (15v)	
	0v	8	8	0v	
	GND	9	9	GND	
	Digital I/O			**Aux. Digital I/O**	
	Thermistor 0v	1	1	0v	
	Thermistor	2	2	Digital I/P 1	
	Pilot / Health	3	3	Digital I/P 2	
	Coast Stop	4	4	Digital I/P 3	
B	Fast Stop	5	5	Digital I/P 4	**E**
	Jog	6	6	Digital O/P 1	
	Start	7	7	Digital O/P 2	
	Enable	8	8	Digital O/P 3	
	24v	9	9	24v	
	Analogue I/O			**Aux. Analogue I/O**	
	GND	1	1	0v	
	0v	2	2	Analogue I/P 3	
	Ramp I/P 1	3	3	Analogue I/P 4	
C	Direct I/P 2	4	4	Analogue I/P 5	**F**
	Analogue O/P 1	5	5	Analogue O/P 2	
	+10v	6	6	-10v	

Figure 2.8 - 620 Terminal Layout

Table 2.2 - Control Board Terminal Descriptions

Terminal Number	Terminal Description - *Feedback Encoder*
A1	A Channel A
A2	/A
A3	B Channel B
A4	/B
A5	Z Channel Z
A6	/Z
A7	15v Isolated Power supply for an encoder, connected internally to D7
A8	0v Isolated Power for an encoder, connected internally to D8
A9	GND connected internally to D9
NOTES	• For improved noise immunity run an individually shielded twisted pair per channel from the drive to the encoder. • In the case of a single-ended encoder, connect /A, /B and /Z from the drive to 0v at the encoder end. • See also DIP Switches page 11 • For electrical ratings, refer to Chapter 1.

Terminal Number	Terminal Description - *Digital I/O (Default configuration)*
B1	Thermistor/Microtherm 0v Terminals B1 and B2 must be linked if over temperature sensors are not used. The use of a motor temperature sensor is always recommended.
B2	Thermistor/Microtherm It is good practice to protect AC motors against sustained thermal overloads by fitting temperature sensitive resistors (thermistors) or switches in the windings of the machine. Thermistors have a low resistance (typically 200Ω) up to a reference temperature (125°C). Above this temperature, their resistance rises rapidly to greater than 2000Ω. Motor over temperature sensors should be connected in series between terminals B1 and B2. A motor over temperature alarm will be indicated if the external resistance between B1 and B2 exceeds 2.6kΩ ±200Ω. The alarm is reset at 1.1kΩ ±200Ω.

Terminal Number	Terminal Description - *Digital I/O (Default configuration)*
B3	Pilot/Health (Open Collector 50mA Sink) This output may be used to drive a pilot relay for an output contactor. The contactor will be brought in on power up or by a drive start by software. It is dropped out unconditionally, bypassing the software if COAST STOP (B4) is low or open circuit. It will also drop out in the event of an alarm becoming active.
B4	Coast Stop When the Coast Stop input is at +24v, the drive operates normally. When the Coast Stop is at 0v or open circuit, the drive no longer operates. The motor coasts to rest.
B5	Fast Stop When the Fast Stop input is held at 24v, the drive operates as required by the inputs. When the Fast Stop is at 0v or open circuit, the drive provides a controlled or fast stop as defined by the Fast Stop parameters.

Table 2.2 - Control Board Terminal Descriptions (Continued)

Terminal Number	Terminal Description - *Digital I/O (continued)*
B6	Jog[1] When the Jog input is held at 24v the drive jogs, provided input B7 (Start) is held low and B4 (Coast Stop), B8 (Enable) & B5(Fast Stop) are held high. When the Jog input is removed the drive will ramp down to zero at the Jog Ramp Rate.
B7	Start [2] When a high input is applied to this terminal the drive will operate provided there are no alarms, B6 (Jog) is held low, B4 (Coast Stop), B8 (Enable) & B5(Fast Stop) are held high. When the input is removed the drive will perform a regenerative stop to zero speed.
B8	Enable The Enable input provides a means of electronically inhibiting drive operation. If the enable input is low (false) all control loops[3] will be inhibited and the drive will not function.
B9	+24v power Internally generated +24v supply which can be used for digital inputs. Maximum load is 200mA.

Terminal Number	Terminal Description - *Analogue I/O (Default configuration)*
C1	GND Analogue screen connection.
C2	Signal 0v
C3	Ramp I/P 1 A bi-directional input that is summed with F2 to form the input to the System Ramp. +10v = Full speed - 10v = Reverse full speed
C4	Direct I/P 2 Trim input direct into speed loop with high speed coupling. Used for external loops, i.e. position controllers. +10v = 100% Speed trim - 10v = -100% Speed trim
C5	Analog O/P 1 Speed feed-back
C6	+10v Voltage reference

Terminal Number	Terminal Description - *Reference Encoder (620L version only)*
D1	A Channel A
D2	/A
D3	B Channel B
D4	/B
D5	Z Channel Z
D6	/Z
D7	15v Isolated Power supply for an encoder, connected internally to A7
D8	0v Isolated Power for an encoder, connected internally to A8
D9	GND connected internally to A9
NOTES	• For improved noise immunity run an individually shielded twisted pair per channel from the drive to the encoder. • In the case of a single-ended encoder, connect /A, /B and /Z from the drive to 0v at the encoder end. • See also DIP Switches page 11 • For electrical ratings, refer to Chapter 1.

[1] Jog is not operational in local mode.

[2] Start is not operational in local mode.

[3] Except the PID

Table 2.2 - Control Board Terminal Descriptions (Continued)

Terminal Number	Terminal Description - *Aux. Digital I/O (Default Configuration)*
E1	0v 0v for digital inputs.
E2	Digital I/P 1 (RAMP HOLD) If the input is held true, the System Ramp output is frozen at the last value irrespective of the Ramp Setpoint Input. When false, the System Ramp output follows the Ramped Setpoint with a delay determined by the Ramp time parameters. Ramp Hold is overridden by Ramp Reset.
E3 E4 E5	Digital I/P 2,3,4 (PRESET SELECT 1, 2, 3) These digital inputs are used to select 1 of 8 preset inputs as shown below: SELECT — Preset Selection 3 2 1 0v 0v 0v **PRESET 1** selected 0v 0v 24v **PRESET 2** selected 0v 24v 0v **PRESET 3** selected 0v 24v 24 **PRESET 4** selected ... ... 24v 24v 24v **PRESET 8** selected The preset inputs are set using the MMI. By default the presets are connected to one of the speed demand inputs.
E6	Digital O/P 1 (ZERO SPEED) Default configuration. Active High at Zero speed. .
E7	Digital O/P 2 (Health) Default configuration. Active High while the drive is Health or START / JOG are low.
E8	Digital O/P 3 (Ready) Default configuration. Active High once the drive has successfully completed is pre-start checks and if Enabled will run.
E9	+24v power as terminal B9

Terminal Number	Terminal Description - *Aux. Analogue I/O*
F1	0v
F2	Analog I/P 3 Default configuration. Ramped input 2, a bi-directional input that is summed with C3 to form the input to the System Ramp. +10v = Full speed - 10v = Reverse full speed
F3	Analog I/P 4 Not configured by default.
F4	Analog I/P 5 Not configured by default.
F5	Analog O/P 2 Default configuration. Torque demand output. +10v = 150% forward output torque - 10v = 150% reverse output torque
F6	-10v Voltage reference

Terminal Number	Terminal Description - *P1 RS-485 Serial port. (Only 4 wire 485 is supported)*
G1	Transmit - (Four wire mode only)
G2	Transmit + (Four wire mode only)
G3	Receive - (Four wire)
G4	Receive + (Four wire)

DIP Switches

The control PCB also houses a set of dual in-line package (DIP) switches, located to the left of the terminals. The twelve switches are numbered, starting with 1 on the left.

The switches are ON when in the UP position (towards the centre of the drive) and OFF when in the DOWN position (towards the edge of the drive).

Switch 1 selects 2 or 4 wire serial communications, 2-wire is selected when the switch is ON, and 4-wire when the switch is OFF (only 4 wire supported).

Switch 2 connects or disconnects the line termination network between terminals G3 and G4. The network is connected when the switch is ON, and disconnected when the switch is OFF. The drive furthest from the host should have switch 2 ON, all other drive should switch 2 in the OFF position.

Switches 3 and 4 are only significant on 620 Link versions of the drive, which are equipped with fibre-optic communications facilities. The switches control the transmitter output power as follows:

Switch 5 is used to test the transmit output power by turning the transmitter permanently ON, when the switch is ON. In this mode a light meter can be used to check that the received power at the far end of the optical fibre is within limits. The switch must be OFF in the normal operation.

Table 2.3 Transmitter Power DIP Switches

2/4 wire

	Switch 1
4-Wire RS-485	Off
2-Wire RS-485 (Not Supported)	On

TX Power

	Switch 3	Switch 4	Switch 5
Low	Off	don't care	Off
Medium	On	Off	Off
High	On	On	Off
Test Mode	don't care	don't care	On

Feedback Encoder

	Switch 7	Switch 8	Switch 9
9v±1 Input Threshold	Off	Off	Off
4v±1 Input Threshold	On	On	On

Reference Encoder

	Switch 10	Switch 11	Switch 12
9v±1 Input Threshold	Off	Off	Off
4v±1 Input Threshold	On	On	On

Switch 6 is not used.

Switches 7 to 9 control the threshold sensitivity for the feedback encoder: switch 7 controls the A input, switch 8 the B input and 9 the Z input. Switches 10 to 12 control threshold sensitivity for the reference encoder (optional): switch 10 controls the sensitivity for the A input, switch 11 the B input and 12 the Z input.

When the switches are set ON, threshold sensitivity is 4V ± 1V.

When the switches are set to OFF, threshold sensitivity is 9V ± 1V.

Usually the switches will be set to give a threshold of 4V when using a differential encoder, and to 9V when using a single ended encoder.

For encoder supply refer to Chapter 5: “Function Blocks” - Calibration.

Power Terminals

WARNING

ELECTRIC SHOCK HAZARD

THE POWER TERMINALS CARRY ELECTRICAL POWER WHICH CAN BE LETHAL. ISOLATE ALL POWER SUPPLIES AND THEN WAIT AT LEAST 3 MINUTES BEFORE REMOVING THE TERMINAL COVER OR WORKING ON ANY CONTROL EQUIPMENT OR MOTORS.

620 Type 4

Table 2.4 - 620 TYPE 4 Power Board Terminals

Terminal	Terminal Description
M1/U, M2/V, M3/W	Power outputs forming the 3-phase supply connection for the motor.
DC-	Power input/output. This terminal is used in conjunction with the DC+ terminal only when two or more controllers are coupled together. It carries a negative DC link voltage.
DC+	Power input/output. This terminal is used for connection to a braking resistor. It is also used in conjunction with the DC- terminal when two or more controllers are coupled together. It carries a positive DC link voltage (typically 600V referred to terminal DC-).
DBR1	Power input/output for the connection of a dynamic braking resistor. Refer to "DYNAMIC BRAKING" for further details. This terminal is connected to the negative side of the link capacitor when the brake option is not fitted.
L1, L2, L3	Power inputs. These terminals are the 3-phase mains supply input, 380 - 460V ± 10% or 208 - 240V ± 10% AC line-to-line.
PE / ⏚	Power earth. This terminal must be connected to a permanent protective earth (ground).
⏚	Motor earth connection. This terminal may be used for the protective earth connection to the motor.
	See Chapter 1, "MECHANICAL DETAILS" for tightening torque

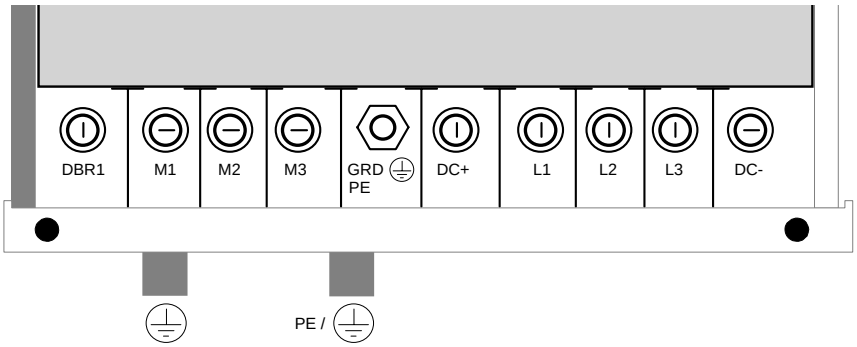

Figure 2.9 - 620 Type 4 Power Terminals

620 Type 5

Table 2.5 - 620 Type 5 Power Board Terminals

Terminal	Terminal Description
M1/U, M2/V, M3/W	Power outputs forming the 3-phase supply connection for the motor.
DC-	Power input/output. This terminal is used in conjunction with the DC+ terminal when two or more controllers are coupled together. It carries a negative DC link voltage.
DC+	Power input/output. This terminal is used for connection to a braking resistor. It is also used in conjunction with the DC- terminal when two or more controllers are coupled together. It carries a positive DC link voltage (typically 600V referred to terminal DC-).
DC	Power input/output. This terminal is connected to the negative side of the D.C. link capacitor. **No customer connection must be made to this terminal.**
DBR1	Power input/output for the connection of a dynamic braking resistor. Refer to "**DYNAMIC BRAKING**" for further details. This terminal is connected to the negative side of the link capacitor when the brake option is not fitted.
L1, L2, L3	Power inputs. These terminals are the 3-phase mains supply input, 380 - 460V ± 10% or 208 - 240V ± 10% AC line-to-line.
PE / ⏚	Power earth. This terminal must be connected to a permanent protective earth (ground).
⏚	Motor earth connection. This terminal may be used for the protective earth connection to the motor.
See Chapter 1, "**MECHANICAL DETAILS**" for tightening torque	

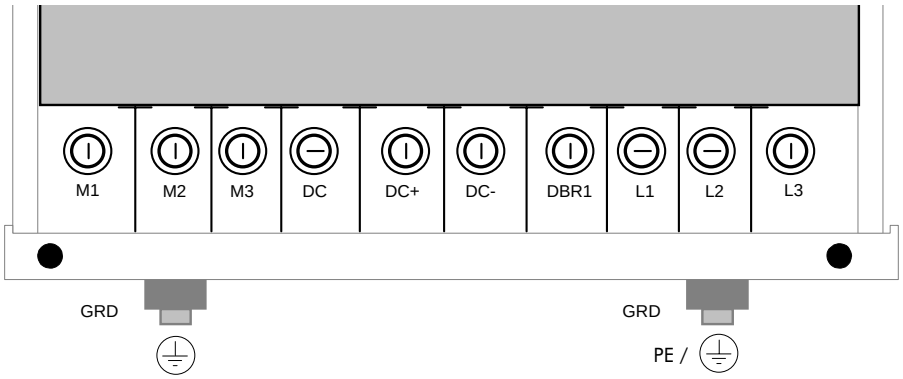

Figure 2.10 - 620 Type 5 Power Terminals

620 Type 6

Table 2.6 - 620 TYPE 6 - Power Terminals

Terminal	Terminal Description
M1/U, M2/V, M3/W	Power outputs forming the 3-phase supply connection for the motor.
DC-	Power input/output. This terminal is used in conjunction with the DC+ terminal when two or more controllers are coupled together. It carries a negative DC link voltage.
DC+	Power input/output. This terminal is used for connection to a braking resistor. It is also used in conjunction with the DC- terminal when two or more controllers are coupled together. It carries a positive DC link voltage (typically 600V referred to terminal DC-).
DBR1	Power input/output for the connection of a dynamic braking resistor. Refer to "DYNAMIC BRAKING" for further details. This terminal is connected to the negative side of the link capacitor when the brake option is not fitted.
L1, L2, L3	Power inputs. These terminals are the 3-phase mains supply input, 380 - 460V ± 10% or 208 - 240V ± 10% AC line-to-line.
PE / ⏚	Power earth. This terminal must be connected to a permanent protective earth (ground).
⏚	Motor earth connection. This terminal may be used for the protective earth connection to the motor.
	See Chapter 1, "MECHANICAL DETAILS" for tightening torque

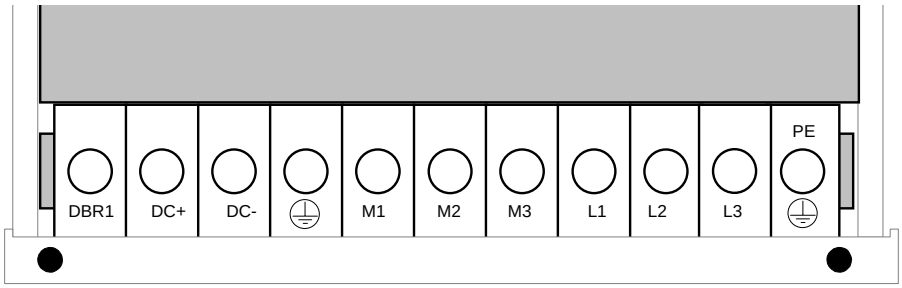

Figure 2.11 - 620 Type 6 Power Board Terminals

620 Type 7

Table 2.7 - 620 TYPE 7 - Power Terminals

Terminal	Terminal Description
M1/U, M2/V, M3/W	Power outputs forming the 3-phase supply connection for the motor.
DC-	Power input/output. This terminal is used in conjunction with the DC+ terminal when two or more controllers are coupled together. It carries a negative DC link voltage.
DC+	Power input/output. This terminal is used in conjunction with the DC- terminal only when two or more controllers are coupled together. It carries a positive DC link voltage (typically 600V referred to terminal DC-).
DBR1	Power output. This terminal is used for connection to a braking resistor. Refer to "DYNAMIC BRAKING" for further details. This terminal is connected to the negative side of the link capacitor when the brake option is not fitted.
DBR2	Power output. This terminal is used for connection to a braking resistor.
L1, L2, L3	Power inputs. These terminals are the 3-phase mains supply input, 380 - 460V ± 10% or 208 - 240V ± 10% AC line-to-line.
PE / ⏚	Power earth. This terminal must be connected to a permanent protective earth (ground).
⏚	Motor earth connection. This terminal may be used for the protective earth connection to the motor.
	See Chapter 1, "MECHANICAL DETAILS" for tightening torque

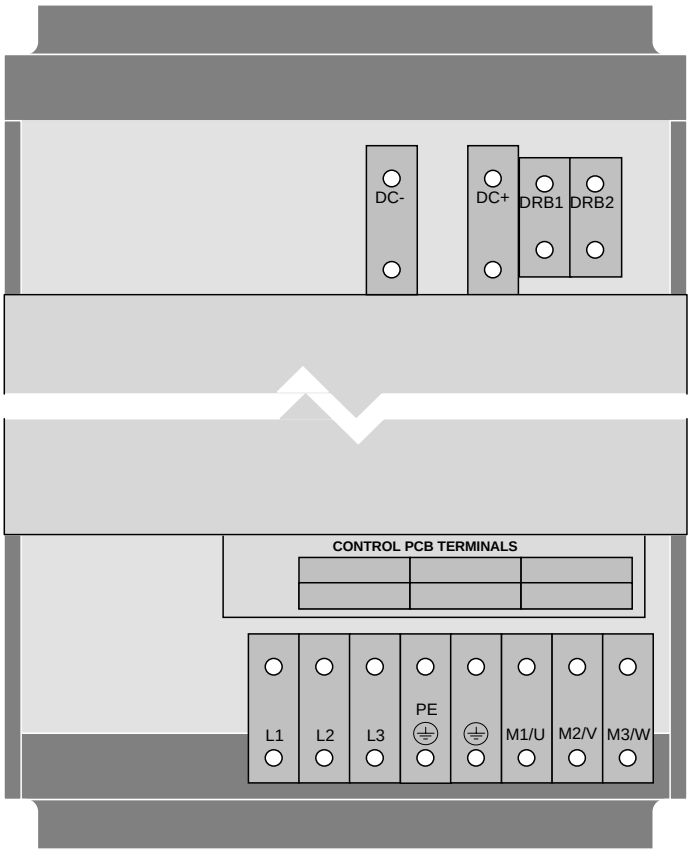

Figure 2.12 - 620 Type 7 Power Terminals

EMC

Refer to Chapter 3 for EMC Installation guidelines.

TERMINATIONS

UL Compression Lug Kit is available for the drives which provide a set of lugs suitable for the following ratings. These lugs must be applied with the correct tooling as described in the Installation Instructions provided with each Lug Kit.

The following terminal kit is available for the connection of Power Cabling.

Product	Supply Voltage	Constant Torque	Quadratic Torque	Kit No.	Lug Size	Amp Part No.
620	380 - 460V	11kW	---	LA389585	#8 AWG	52263-1
	380 - 460V	15kW	---			
	208 - 240V	5.5kW	---			
	208 - 240V	7.5kW	---			

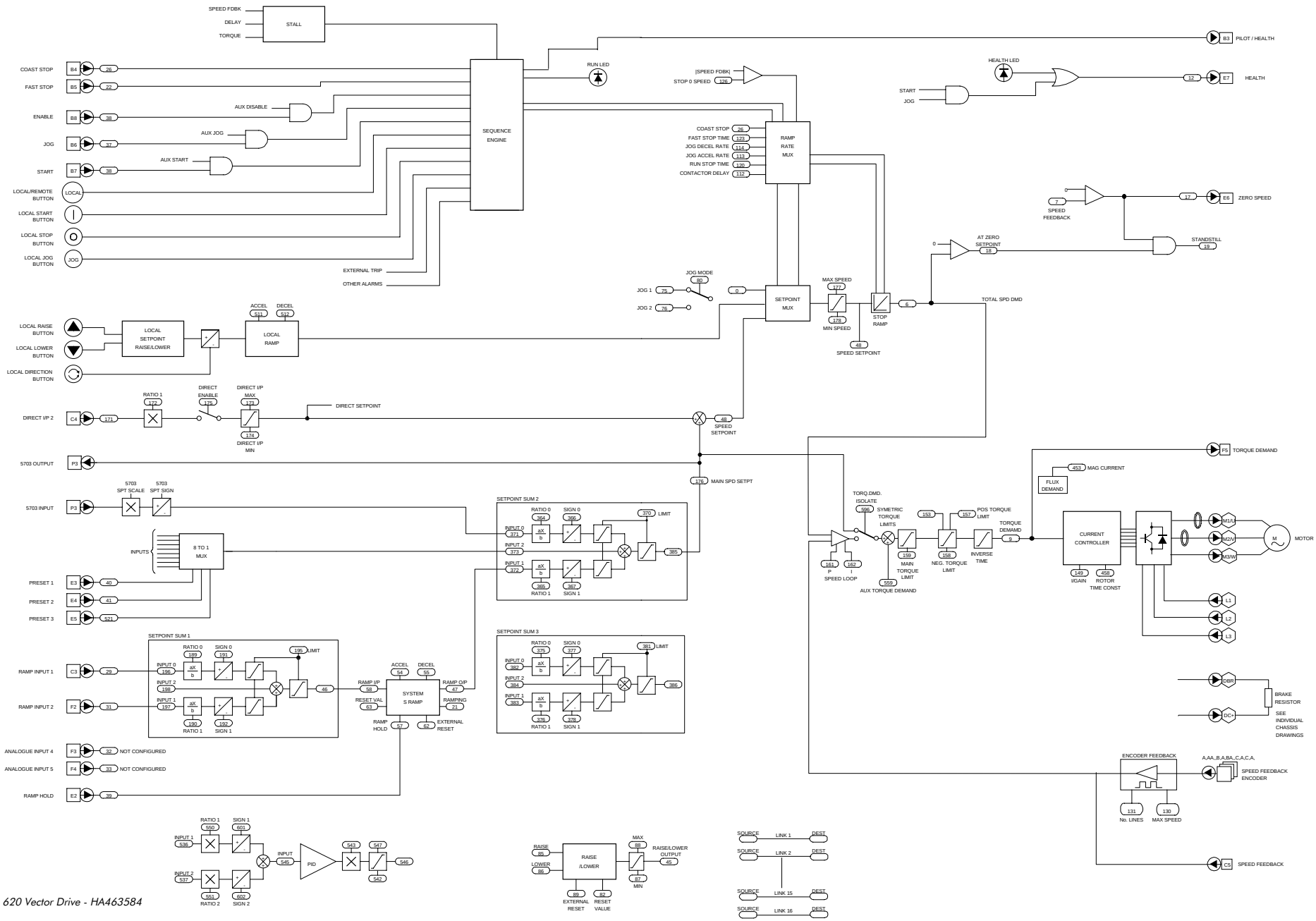
SPEED FDBK
DELAY
TORQUE
STALL
COAST STOP
FAST STOP
ENABLE
JOG
START
LOCAL/REMOTE BUTTON
LOCAL START BUTTON
LOCAL STOP BUTTON
LOCAL JOG BUTTON
AUX DISABLE
AUX JOG
AUX START
SEQUENCE ENGINE
RUN LED
EXTERNAL TRIP
OTHER ALARMS
PILOT / HEALTH
HEALTH LED
HEALTH
START
JOG
|SPEED FDBK|
STOP 0 SPEED
COAST STOP
FAST STOP TIME
JOG DECEL RATE
JOG ACCEL RATE
RUN STOP TIME
CONTACTOR DELAY
RAMP RATE MUX
SPEED FEEDBACK
ZERO SPEED
AT ZERO SETPOINT
STANDSTILL
JOG MODE
JOG 1
JOG 2
SETPOINT MUX
MAX SPEED
MIN SPEED
STOP RAMP
SPEED SETPOINT
TOTAL SPD DMD
LOCAL RAISE BUTTON
LOCAL LOWER BUTTON
LOCAL DIRECTION BUTTON
LOCAL SETPOINT RAISE/LOWER
ACCEL
DECEL
LOCAL RAMP
DIRECT I/P 2
RATIO 1
DIRECT ENABLE
DIRECT I/P MAX
DIRECT I/P MIN
DIRECT SETPOINT
SPEED SETPOINT
5703 OUTPUT
MAIN SPD SETPT
TORQUE DEMAND
MAG CURRENT
FLUX DEMAND
5703 INPUT
5703 SPT SCALE
5703 SPT SIGN
INPUTS
8 TO 1 MUX
PRESET 1
PRESET 2
PRESET 3
SETPOINT SUM 2
RATIO 0
SIGN 0
INPUT 0
INPUT 2
INPUT 1
LIMIT
RATIO 1
SIGN 1
TORQ.DMD. ISOLATE
SYMETRIC TORQUE LIMITS
POS TORQUE LIMIT
TORQUE DEMAND
P SPEED LOOP
I
AUX TORQUE DEMAND
MAIN TORQUE LIMIT
NEG. TORQUE LIMIT
INVERSE TIME
CURRENT CONTROLLER
I/GAIN
ROTOR TIME CONST
MOTOR
L1
L2
L3
SETPOINT SUM 1
RAMP INPUT 1
RAMP INPUT 2
SYSTEM S RAMP
RAMP I/P
RESET VAL
RAMP HOLD
RAMP O/P
RAMPING
EXTERNAL RESET
SETPOINT SUM 3
DBR
DC+
BRAKE RESISTOR
SEE INDIVIDUAL CHASSIS DRAWINGS
ANALOGUE INPUT 4
ANALOGUE INPUT 5
NOT CONFIGURED
RAMP HOLD
ENCODER FEEDBACK
SPEED FEEDBACK ENCODER
No. LINES
MAX SPEED
SPEED FEEDBACK
INPUT 1
INPUT 2
PID
RAISE
LOWER
RAISE /LOWER
MAX
MIN
RAISE/LOWER OUTPUT
EXTERNAL RESET
RESET VALUE
SOURCE
LINK 1
LINK 2
LINK 15
LINK 16
DEST

Chapter 3 Installation Procedure

INTRODUCTION

This chapter contains the procedures required to install a 620 Vector Drive.

INSTALLATION PRECAUTIONS

Caution

This product conforms to IP20 protection. Due consideration should be given to environmental conditions of installation for safe and reliable operation.

When installing the 620 Vector Drive, the following points must be considered.

1) Mechanically secure fixings must be used, as recommended in "**MOUNTING**".
2) The enclosure into which this product is mounted must be suitable for the working environment.
3) The cooling and airflow around this product must be as recommended in "**VENTILATION**".
4) The cables and wire terminations must be as recommended and securely clamped.
5) The installation and commissioning of this equipment must only be carried out by competent personnel in accordance with safe working practices.

MECHANICAL INSTALLATION

Mounting

Mounting dimensions and suitable fixing bolts are shown in Figure 3.1.

The 620 Vector Drive must be mounted vertically on a cool, solid, flat vertical surface. It must be fixed using 4 bolts or screws of the correct size through the fixing points provided at each corner at the rear of the unit. The fixing points are in the form of keyholes and slots to simplify fastening or removal.

Ventilation

In normal operation the drive dissipates heat and must be mounted to allow the free flow of air vertically through the unit. Care must be taken to ensure that the mounting surface is cool and that any heat generated by adjacent equipment is not transmitted to the 620 Vector Drive. Similarly, ensure that the heat generated by the drive will not adversely affect any other equipment or cabling.

For adequate ventilation of the drive, minimum clearance as defined in Figure 3.1 Mechanical Outline Drawings must be maintained. Side-by-side mounting of two or more drives is permissible providing the ambient operating temperature is not exceeded.

3-2 Installation Procedure

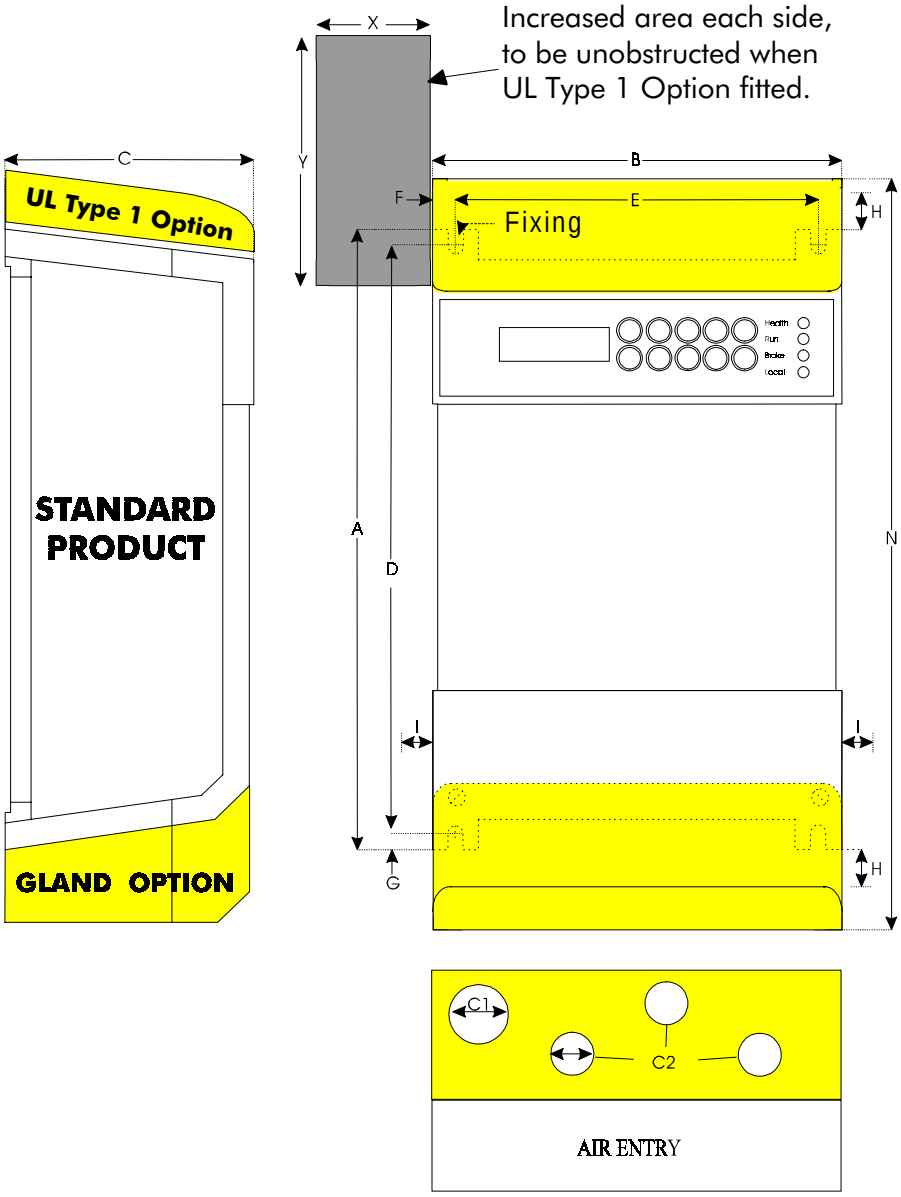

Figure 3.1 Mechanical Outline Drawings

Model	Outside Dimensions (mm)			Fixing Centres (mm)				Fixing Size	Cooling air clearance (mm)		OPTIONS				
											Overall height (mm)	Exit air clearance (mm)		Conduit hole size (mm)	
	A	B	C	D	E	F	G		H	I	N	X	Y	C1	C2
Type 4	318	228	157	300	200	14	9	M6	80	10	385	40	130	32	20-32
Type 5	468	228	157	450	200	14	9	M6	80	10	535	40	130	32	20-32
Type 6	672	234	298	650	200	17	11	M8	100	40	775	40	130	20-40	32-40
Type 7*	838	398	336	800	370	14	19	M10	250	50	1125	120	300	-	44-76

Table 3.1 - 620 Mounting Arrangements

* Full details of through panel mounting of type 7 not available at time of going to press. Please contact Eurotherm Drives Engineering department.

ELECTRICAL INSTALLATION

The following instructions describe the wiring requirements for operation of the 620 as basic speed controller. The variety of specific drive applications precludes the inclusion of diagrams showing all wiring options.

Power Wiring

Caution

Never perform high voltage resistance checks on the wiring without first disconnecting the drive from the circuit being tested.

Observe all national standards and local electricity supply company regulations while installing the 620 Vector drive.

The following considerations apply to all installations.

1) Power cables must be rated at a minimum of 110% of the expected supply current.

2) Power cables (particularly 3-phase motor cables) must be routed well away from cables carrying setpoints or feedback signals, screened motor feedback cables, and cables from other electronic equipment in the same plant.

3) The motor supply cables should be screened to avoid causing undue interference to other equipment in the area.

4) The mains power supply must be 3-phase and within the voltage tolerances specified in "**ELECTRICAL RATINGS - Power Circuit**" in Chapter 1 of this manual. The supply must be connected to power board terminals L1, L2 and L3 of the 620 Vector drive.

Minimum Cable Diameters and Supply Protection

The incoming mains supply should be protected as shown below:

Controller Rating 380 - 460 Volts	Controller Rating 208 - 240 Volts	Fuse or Circuit Breaker (Amps)	Cable Diameter (mm^2)	
			MIN	NORMAL
0.75	-	10	1.5	1.5
1.1	-	10	1.5	1.5
1.5	0.75	10	1.5	1.5
2.2	1.1	10	1.5	1.5
4.0	1.5	20	3.5	4
5.5	2.2	20	3.5	4
7.5	4.0	20	3.5	4
11	5.5	32	5.5	6
15	7.5	40	8.5	10
18	-	50	12.5	16
22	11	63	18	16
30	15	100	37	35
37	18	100	37	35
45	22	125	50	50
55	30	160	65	70
75	37	200	85	95

* - Cable diameters listed assume the conductors are in free air. Fuses are standard type with slow-blow characteristic or a circuit breaker. NOTE: These are typical values only. If in doubt please observe your national standards or local electricity supply regulations. For installations requiring compliance with UL standards, refer to **Special Considerations** and **Electrical Ratings - Power Circuit** in chapter 1.

Earthing

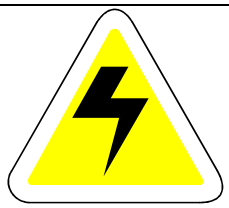

WARNING!

THE MOTOR MUST BE CONNECTED TO AN APPROPRIATE SAFETY EARTH. FAILURE TO DO SO CONSTITUTES AN ELECTRICAL SHOCK HAZARD.

ALL FREQUENCY CONVERTERS MUST BE PERMANENTLY EARTHED

In accordance with the European Low Voltage Directive standards VDE 0160 (1994)/EN50178 (1998) permanent earthing requires either:-

i) The cross section of the protective conductor should be at least 10mm^2 (copper). (Note this minimum cross section was determined with regard to mechanical strength).

ii) Laying of a second conductor through separate terminals and electrically parallel to the protective conductor. Earth conductor shall individually satisfy the requirements for a protective conductor (Note this ensures the equipment is still protectively earthed if one conductor is damaged).

For normal installation the Type 4 series will require two individual incoming protective earth conductors (<10mm^2 cross section) and the Type 5, 6 and 7 one (≥10mm^2 cross section).

MODEL 620 TYPE 4 AND TYPE 5 SERIES

Cubicle-Mounted (IP20) Models

Model 620 Type 4 Series

Protective earthing arrangements for these models are provided by a single-size M4 diameter earth terminal located at the centre of the power terminal array, together with two further earth terminals consisting of size M4 diameter slot-head screws and washers located on the lower face of the drive, as shown in the drawing below. In all cases, the terminals are identified with the symbol ⏚ (IEC 417, Symbol 5019) and are intended to be used with protective conductors terminated with compression terminations sized to accept the M4 diameter bolt fitted and the conductor size selected. In Europe two incoming protective conductors shall be used for permanent earthing, one connected to each of the terminals marked "PE" ('A' and 'B') whilst the motor protective conductor shall be connected to the remaining earth terminal located on the lower face of the drive identified with the symbol ⏚ only.

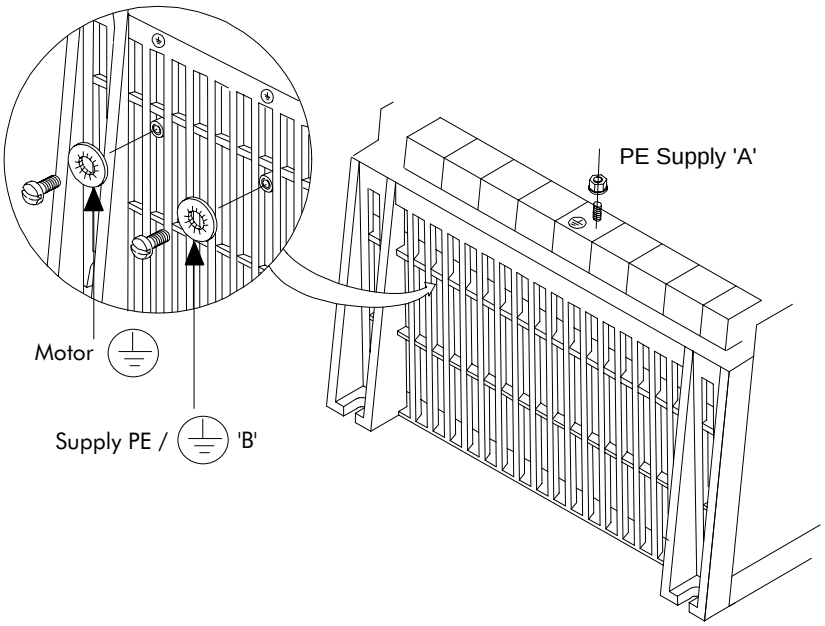

3-6 Installation Procedure

Model 620 Type 5 Series

Protective earthing arrangements for these models are provided by two size M5 diameter terminals located on the lower face of the drive, as shown in the drawing below. The terminals are identified with the symbol ⏚ (IEC 417, Symbol 5019) and are intended to be used with protective conductors terminated with compression terminations sized to accept the M5 diameter bolt fitted and the conductor size selected. The single incoming protective conductor shall be of 10mm^2 cross sections minimum (permanent earthing in Europe) and be connected to the terminal marked “PE”, as shown in the drawing below, whilst the motor protective conductor shall be connected to the remaining earth terminal located on the lower face of the drive.

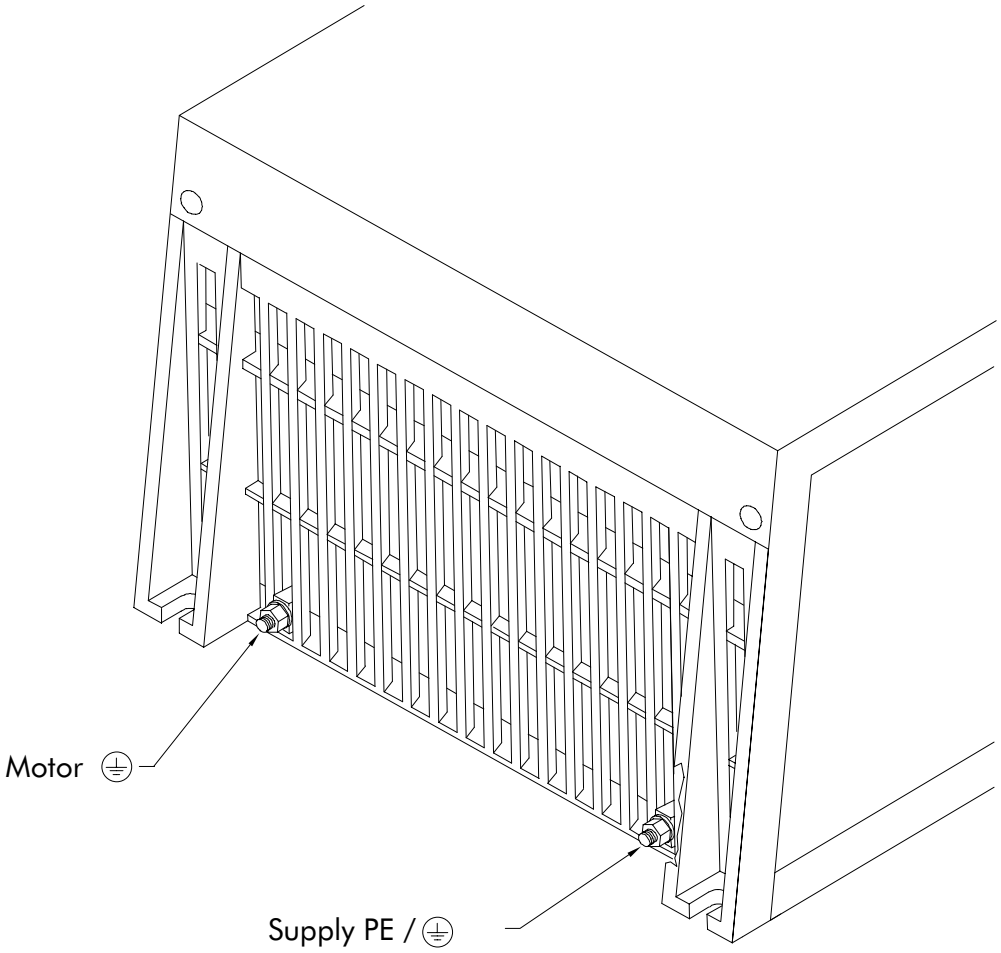

Direct Wall-Mounted Models

Model 620 Type 4 and Type 5 Series

Protective earthing arrangements for wall-mounted models are provided by two size M5 diameter terminals mounted on either side of the internal faces of the sideplates of the conduit gland box as shown in the accompanying drawing. Both terminals are identified with the symbol ⏚ (IEC 417, Symbol 5019) and are intended to be used with protective conductors terminated with compression terminations sized to accept the M5 diameter bolt fitted and the conductor size selected. The single incoming protective conductor shall be of $10mm^2$ cross section minimum (for permanent earthing in Europe) connected to the terminal marked “PE”, as shown in the drawing below, whilst the motor protective conductor shall be connected to the remaining earth terminal within the gland box.

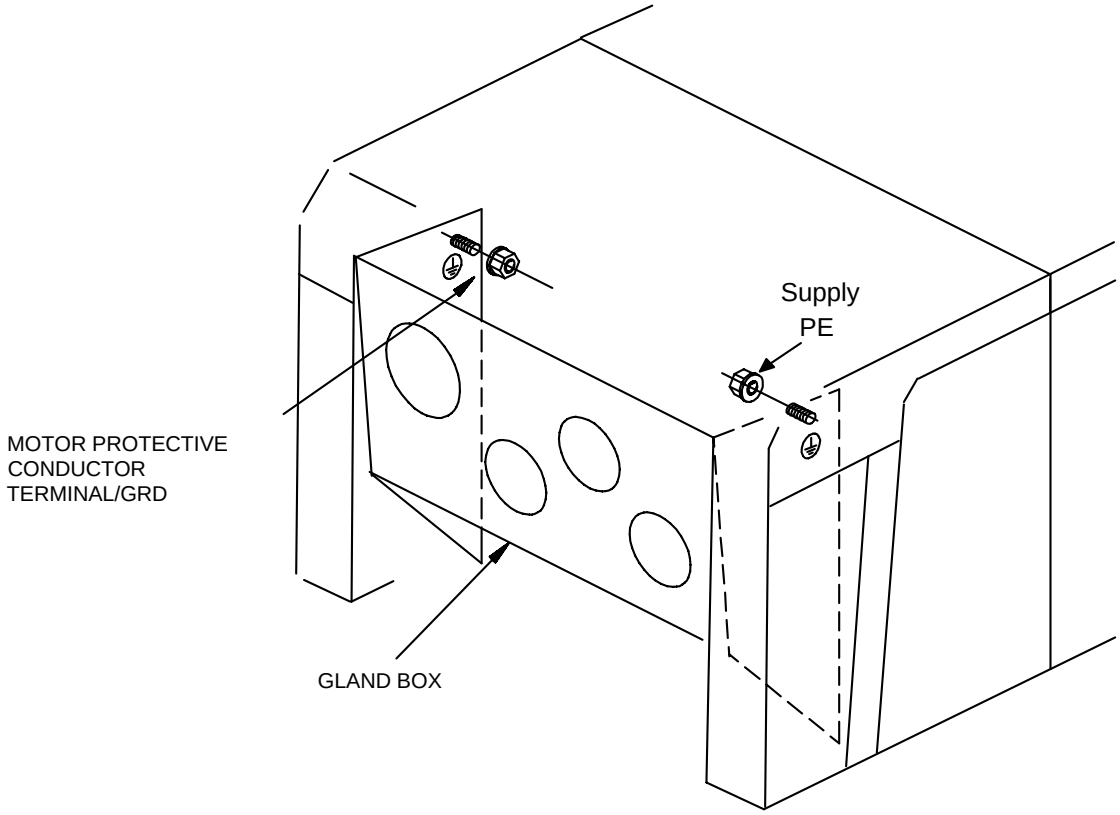

DIRECT WALL-MOUNTING PE/GRD CONNECTIONS
620 TYPES 4 & 5

3-8 Installation Procedure

MODEL 620 TYPE 6 AND TYPE 7 SERIES

The protective earthing arrangements for these models consist of two green-yellow coloured terminal blocks located as part of the power terminal array, as shown in the accompanying drawings. The incoming protective conductor of suitable size shall be connected to the terminal marked “PE” as shown in the drawing below, whilst an adequately rated motor protective conductor shall be connected to the remaining earth terminal block. The incoming protective earth conductor will be >10mm^2 in cross section so the drives will be permanently earthed for Europe.

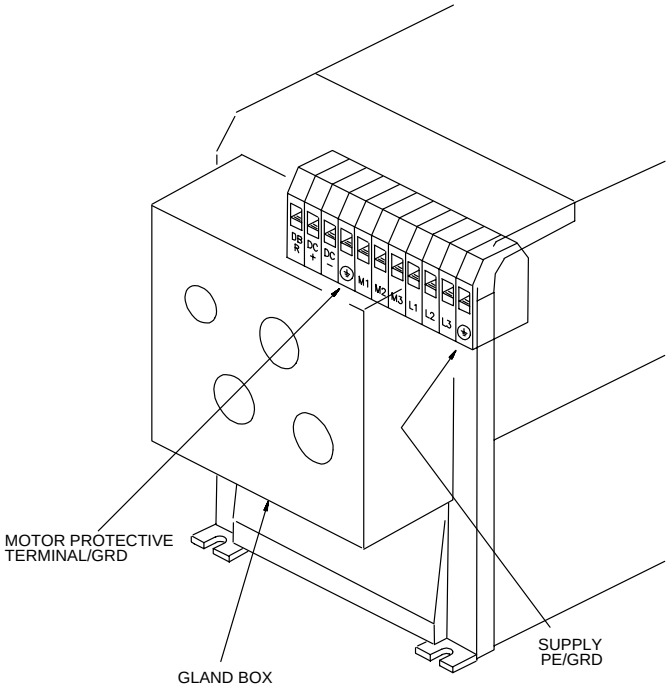

CUBICLE AND WALL MOUNTING PE/GRD CONNECTIONS
620 TYPE 6

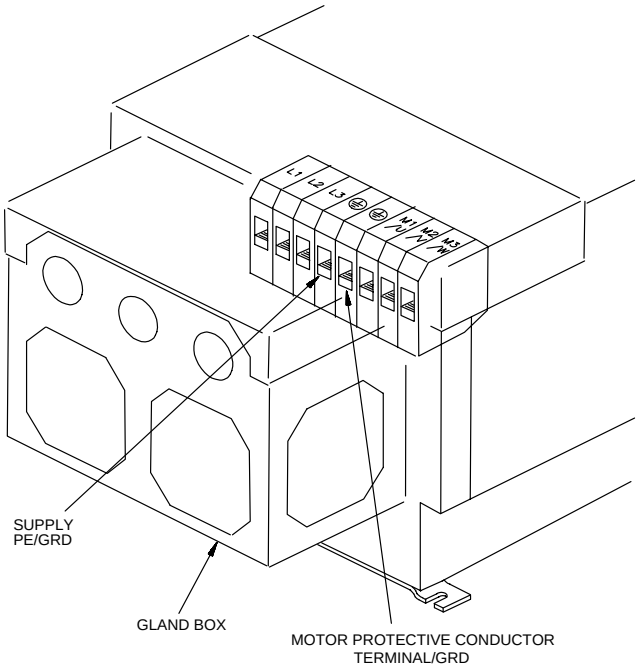

CUBICLE AND WALL MOUNTING PE/GRD CONNECTIONS
620 TYPE 7

Control Wiring

General wiring diagrams for the 620 are provided in Chapter 2.

Control cables should be 0.75mm^2 (18AWG) minimum. It is recommended that screened cable is used, with the screen connected at the drive end only. Control wiring should be kept separate from power and motor wiring.

For normal speed control operation, the speed demand signals are connected to the speed inputs (control board terminals C3, C4 and F2) as required. Terminal C2 or F1 may be used for the 0V connection associated with the SPEED SETPOINT and DIRECT INPUT signals. The maximum speed, and other associated parameters, are set from the MMI.

The START signal to the 620 Vector drive is provided by connecting a single holding contact between control board terminal B7 (START) and terminal B9 (+24V). When the contact is open, the motor stops. When the contact is closed and both COAST STOP and FAST STOP are at +24V, the motor will run.

A digital output indicating that the drive is healthy is provided on terminals E7 of the 620 Vector drive. Any alarm which causes the drive healthy output to de-activate is internally latched by the drive until both START and JOG go low (0V or open circuit). The cause of the alarm is displayed by the MMI. Once latched, such an alarm can be cleared only by removing and re-applying the START or JOG signal.

DYNAMIC BRAKING

Introduction

During deceleration, or with an overhauling load, the motor acts as a generator. Energy flows back from the motor into the DC link capacitors within the drive. This causes the DC link voltage to rise. If the DC link voltage exceeds 810V for the 400V build (or 420V for the 230V build) then the drive will trip to protect the capacitors and the inverter power devices. The amount of energy that can be absorbed in the capacitors is relatively small; typically more than 20% braking torque will cause the drive to trip on overvoltage. Dynamic braking increases the braking capability of the drive by dissipating the excess energy in a high power resistor connected across the DC link (refer to Figure 3.2).

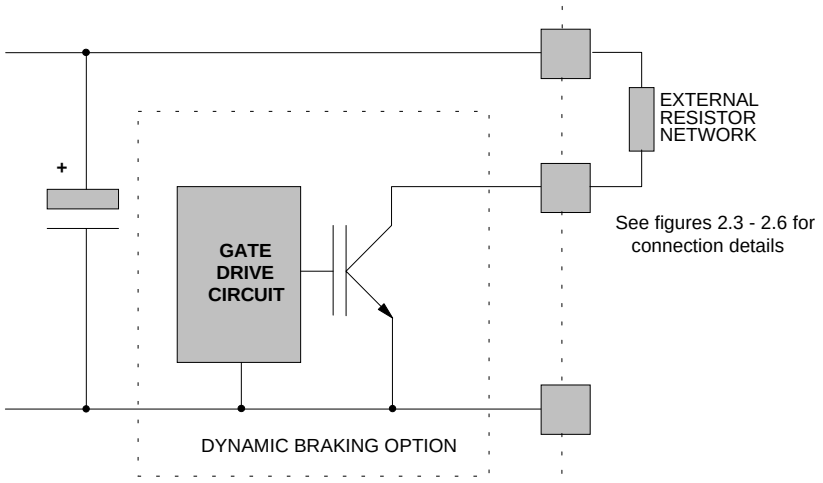

Figure 3.2 - The Dynamic Braking Option

The dynamic braking option is a PCB with an extra IGBT power device fitted. This is fitted inside the drive package and is connected to the negative side of the DC link as shown in Figure 3.2.

When the DC link voltage rises above 750V for the 400V build (385V for the 230V build), the brake unit switches the external resistor network across the DC link. The brake unit switches off again when the DC link voltage falls below the threshold level. The amount of energy produced by the motor during regeneration depends upon the RAMP DOWN TIME parameter and the inertia of the load.

> Note: The dynamic braking option is designed to cope with short term stopping or braking only. It is not rated for a continuously overhauling load.

The following paragraphs should be used as a guide to calculate the braking requirements of the system.

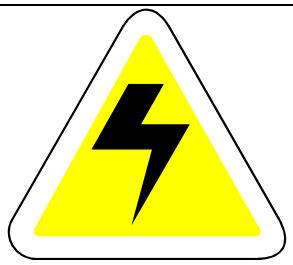

WARNING!

Connecting a brake resistor to a drive not fitted with brake option (see product code) will result in damage to this unit. In the case when an internal brake option is not present the DBR terminal may be used to connect an external braking unit

Brake Resistor Selection

Brake resistor assemblies must be rated to absorb both peak braking power during deceleration and the average power over the complete cycle.

$$\text{Peak braking power} = \frac{0.0055J \times (n_1^2 - n_2^2)}{t_b} \quad \text{(W)}$$

$$\text{Average braking power } P_{av} = \frac{P_{pk}}{t_c} \text{ x } t_b$$

J	- total inertia (kgm^2)
n_1	- initial speed (rpm)
n_2	- final speed (rpm)
t_b	- braking time (s)
t_c	- cycle time (s)

Information on the peak power rating and the average power rating of the resistors must be obtained from the resistor manufacturer. Alternatively if this information is not available then a large safety margin must be incorporated to ensure that the resistors are not overloaded. Eurotherm Drives can supply suitable brake resistor assemblies as detailed over.

By connecting these resistors in series and in parallel the braking capacity can be selected for the application.

The minimum resistance of the combination should not be less than that specified in Table 3.2.

The resistor(s) must be specified to the maximum DC link voltage (810V for the 400V build, 420V for the 230V build).

Brake Resistor Specification

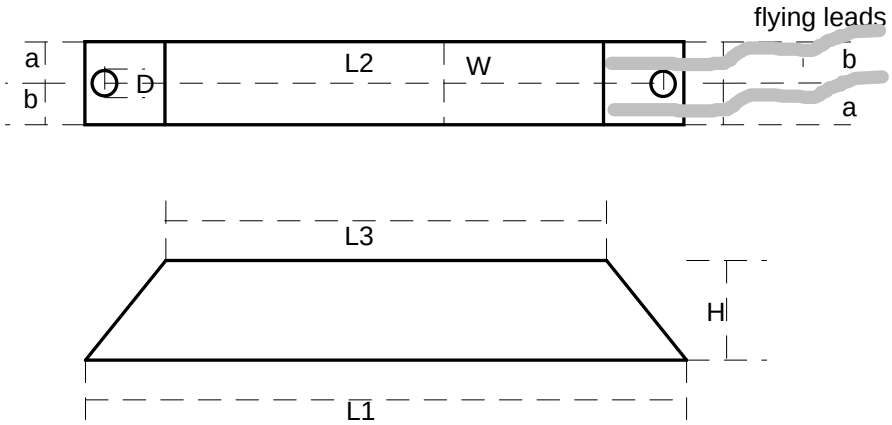

Figure 3.3 Mechanical outline of default brake resistors.

Part number	CZ463068	CZ388396
Resistance	56ohms	36ohms
Max Wattage	200W	500W
5 second rating	500%	500%
3 second rating	833%	833%
1 second rating	2500%	2500%
Dimensions L1 (mm)	165	335
L2 (mm)	146	316
L3 (mm)	125	295
W (mm)	30	30
H (mm)	60	60
D (mm)	5.3	5.3
a (mm)	13	13
b (mm)	17	17
Flying lead length (mm)	500	500
Electrical Connection	M5 spade	M5 ring

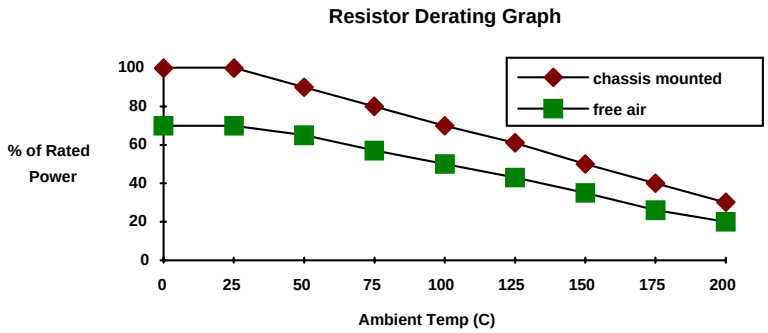

These resistor should be mounted on a heatsink (back panel) and covered to prevent injury from burning.

Specification of the Dynamic Braking Switch

Chassis type 4		
Typical motor rating	(380 - 460 Volts)	0.75kW to 7.5kW
Typical motor rating	(208 - 240 Volts)	0.75kW to 4.0kW
Current rating	(20s max)	15A
Max duty cycle		30%
Min resistor value	(380 - 460 Volts)	50Ω
Min resistor value	(208 - 240 Volts)	25Ω

Chassis type 5		
Typical motor rating	(380 - 460 Volts)	11kW to 15kW
Typical motor rating	(208 - 240 Volts)	5.5kW to 7.5kW
Current rating	(20s max)	30A
Max duty cycle		30%
Min resistor value	(380 - 460 Volts)	25Ω
Min resistor value	(208 - 240 Volts)	12.5Ω

Chassis type 6					
Typical motor rating	(380 - 460 Volts)	18kW	22kW	30kW	37kW
Typical motor rating	(208 - 240 Volts)	-	11kW	15Kw	18kW
Current rating	(20s max)	45A	45A	65A	75A
Max duty cycle		30%	30%	30%	30%
Min resistor value	(380 - 460 Volts)	17Ω	17Ω	11.5Ω	10Ω
Min resistor value	(208 - 240 Volts)	-	8.5Ω	6Ω	5Ω

Chassis type 7				
Typical motor rating	(380 - 460 Volts)	45kW	55kW	75kW
Typical motor rating	(208 - 240 Volts)	22kW	30kW	37kW
Current rating	(20s max)	90A	110A	150A
Max duty cycle		30%	30%	30%
Min resistor value	(380 - 460 Volts)	8.3Ω	6.9Ω	5.0Ω
Min resistor value	(208 - 240 Volts)	4.2Ω	3.5Ω	2.6Ω

Table 3.2 Dynamic Braking Switch Ratings

Type 8,9 and 10 Brake Unit Rating

The type 8, 9 and 10 brake units have the following specification -

Maximum braking power: 150%

Operating voltage: 750 - 820 V dc

Maximum duty cycle: 30%

Maximum on time: 20 Seconds

Drive size	Max. Brake Current @750Vdc	Minimum Brake Resistance
Size 8 / 0900	220A	3.40 ohms
Size 8 / 1100	264A	2.84 ohms
Size 8 / 1320	300A	2.50 ohms
Size 9 / 1600	360A	2.00 ohms
Size 9 / 1800	440A	1.70 ohms
Size 9 / 2000	450A	1.60 ohms
Size 10 / 2500	525A	1.43 ohms
Size 10 / 2800	675A	1.11 ohms

Brake Resistor Selection - Further notes

There are several criteria which must be fulfilled when selecting a braking resistor for safe and proper operation. These include peak and average power dissipation, resistance and voltage rating. This section describes how to select the right resistor for the application.

When the motor is decelerating a load, the amount of power it creates is determined by the inertia of the load and the time the change in speed takes. The rate of change is determined by the MMI parameter **RAMP DOWN TIME**.

Calculating Power Dissipation

The power dissipation of the resistor needs to be calculated for both peak and average power. The relationship between these two figures is shown in Figure 3.4.

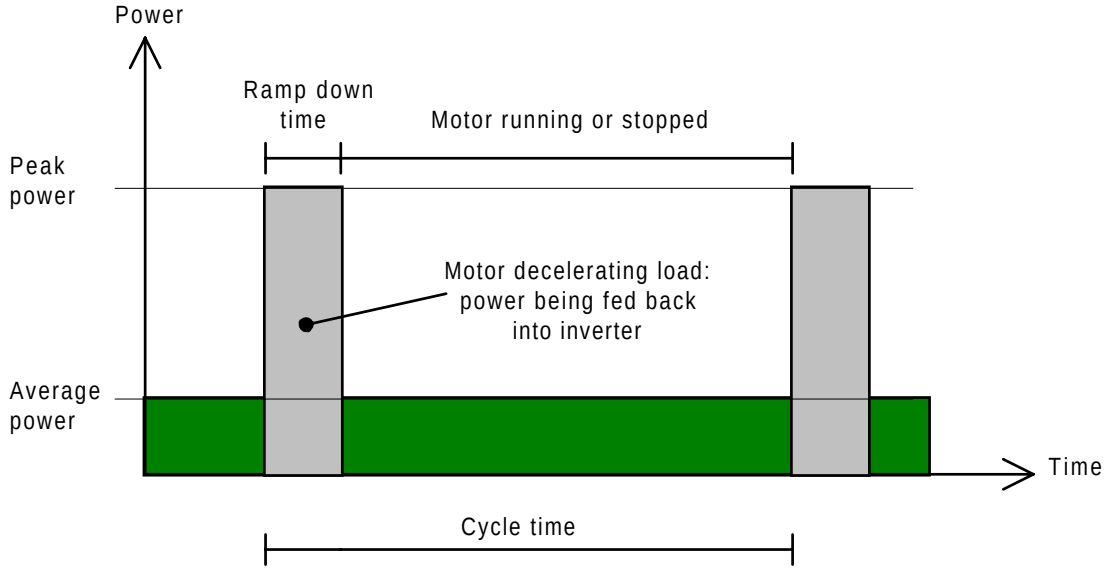

Figure 3.4 Peak and Average power

The peak power dissipation depends on the change in motor rotational speed, how quickly the change is achieved, and the inertia of the load. This is calculated as follows:

$$\text{Peak power dissipation (in W)} = \frac{0.0055 \text{ x total inertia } \left(\text{in kgm}^2\right) \text{ x } \left(\text{initial RPM}^2 \text{ - final RPM}^2\right)}{\text{ramp down time}}$$

or,

$$P_{pk} = \frac{0.0055 \text{ x J x } \left(N_1^2 - N_2^2\right)}{t_b}$$

where J = total inertia in kgm^2, N_1 is the initial motor speed in RPM, N_2 is the final speed and t_b is the braking time in seconds.

The average power dissipation calculated as follows:

$$\text{Average power (W)} = \frac{\text{peak power in W} \times \text{ ramp down time}}{\text{cycle time in seconds}}$$

or,

$$P_{av} = \frac{P_{pk}}{t_c} \times t_b$$

where t_c is the cycle time in seconds (refer to Figure 3.4)

For example, for a system with a total inertia of 1 kgm^2 decelerating from 1500 RPM to 500 RPM in 10 seconds and a cycle time of 110 seconds, the calculations are:

$$\begin{aligned}
\text{Peak power (W)} &= \frac{0.0055 \text{ x } 1 \text{ x } \left(1500^2 - 500^2\right)}{10} \\
&= \frac{0.0055 \text{ x } (2250000 - 250000)}{10} \\
&= \frac{0.0055 \text{ x } (2000000)}{10} \\
&= \frac{11000}{10} \\
&= 1100\text{W (1.1kW) Peak for 10 Seconds}
\end{aligned}$$

$$\begin{aligned}
\text{Average power (W)} &= \frac{\text{peak power}}{\text{cycle time in seconds}} \text{ x braking time in seconds} \\
&= \frac{1100}{110} \text{ x } 10 \\
&= 100\text{W}
\end{aligned}$$

The brake resistor must be rated to cope with both the peak and average power. For the above example, a resistor capable of dissipating 1100W peak for 10 seconds and an average power of 100W will be required.

Information on the peak power rating and the average power rating of resistors must be obtained from the resistor manufacturer. Alternatively if this information is not available then a large safety margin must be incorporated to ensure that the resistors are not overloaded.

The resistance of the resistor is an important factor. Each of the 620 Vector drives has a specified minimum load resistance. Under no circumstances must a resistor of lower value be used, as this will cause serious damage to the electronic switch. The minimum resistor values and the maximum permissible peak power dissipation for a maximum of 20 seconds are listed in Table 3.1.

If the power dissipation is to be significantly less than half the maximum allowable, a higher resistance value may be used if this is convenient, up to a maximum of five times the minimum resistance. A rule of thumb calculation for this is as follows:

$$\text{Maximum resistance } (\Omega) = R_{max} = R_{min} \text{ x } \frac{P_{max}}{2 \text{ x } P_{pk}} \quad \text{but note: } R_{max} \leq 5 \text{ x } R_{min}$$

No damage will be caused if any resistance between this value and the minimum specified in Table 3.1 is used. Always use a lower resistance rather than a higher resistance if the calculated value is not available.

Series/parallel Networks

In order to obtain the necessary power rating, it will usually be necessary to build up a series/parallel network of resistors, as shown in Figure 3.5.

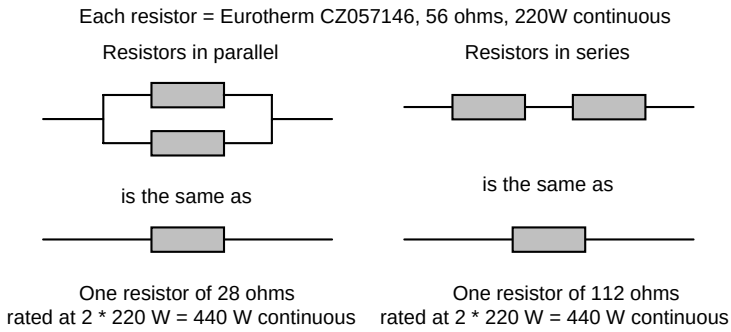

Figure 3.5 Example parallel and series networks

By connecting resistors in series and in parallel the braking capacity can be selected for the application. **Always use identical resistors in series/parallel combinations for braking applications.**

The formula to calculate the effects of series and parallel combinations are as follows.

Resistors in series: Total resistance = the sum of all the resistances (i.e. R1 + R2 + R3 +R4 etc.).

Resistors in parallel: Total resistance $= \dfrac{\text{resistor value}}{\text{total number of resistors}}$

Power dissipation: the number of resistors times the individual power dissipation of each resistor.

For example, four Eurotherm CZ057146 56 Ω 220W continuous resistors in series:

Total resistance = 56 Ω + 56 Ω + 56 Ω + 56 Ω = 224 Ω

Four Eurotherm CZ057146 56 Ω 220W continuous resistors in parallel:

Total resistance = $\dfrac{56\ \Omega}{4} = 14\ \Omega$

Continuous power ratings in both cases are 880W (four times 220W). Peak powers are similarly multiplied by four.

Series and parallel networks can be combined as shown in Figure 3-5. The calculations are then simply combined: add up the series resistances first, then calculate the effect of having the appropriate numbers in parallel.

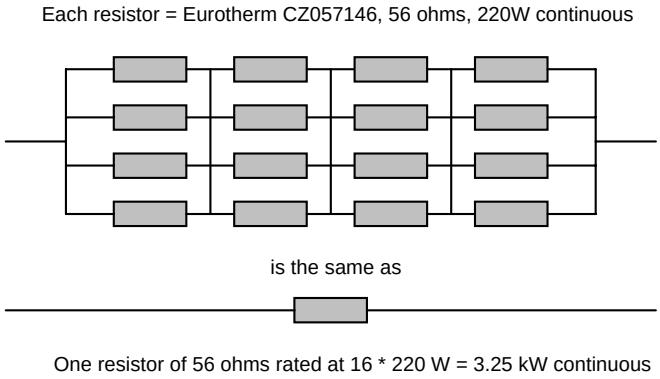

Figure 3.6 Series/parallel network

A special case is for 'square' series/parallel networks where the number of series elements is the same as the number of parallel elements, as in Figure 3.6. In such an array the total resistance is always the same as one resistor; the power rating is the rating of one resistor multiplied by the number of resistors.

Resistor Voltage Ratings

The resistor(s) must be specified for the maximum DC link voltage (800V for the 380-460V version, 405V for the 208-240V version).

EMC INSTALLATION GUIDELINES

Introduction

This section provides installation guidelines for drive modules and systems to maximise their '**E**lectro **M**agnetic **C**ompatibility' (EMC) in their intended operating environment. All installers must read this section and apply the advice which is relevant to their application. **Pass on this information to others as is appropriate.**

All power drive systems have the potential to produce electrical emissions, both radiated and conducted back into the AC supply. This is due to the inherent operation of all drives by switching large voltages and currents rapidly in order to control the motor. Because the drives internal control electronics operates continuously in very close proximity to the electrically noisy power switching elements, drives are inherently immune to any additional external electrical noise.

Great care has been taken in the design and selection of suitable EMC filters to provide the correct level of interface suppression, ease of installation and to ensure that electrical safety is not compromised. The EMC performance can only be guaranteed to be within the limits specified when the 620 drive modules are installed together with the recommended EMC filters in accordance with the following instructions.

The subject of EMC is explored in more detail in a separate Eurotherm Application Manual entitled "EMC Installation Guidelines for modules and systems', part number HA388879, available from your local Eurotherm office.

EMC Filters to Reduce Line Conducted Noise

An EMC supply filter may be used with each 620 drive module to reduce the line conducted noise. The recommended filters are listed in table 3.3 below.

Table 3.3 AC Supply Filter Part Numbers for Conformance with EN55011 Class B (suitable for both generic environments)

Eurotherm Product	Rating	Watt Loss	Eurotherm Filter Part Number
620 Type 4	0.75kW - 5.5kW (380V to 460V) & 0.75kW - 2.2kW (208V to 240V) constant torque	20W	CO388966U021
620 Type 4	7.5kW (380V to 460V) & 4kW (208V to 240V) constant torque	35W	CO388966U035
620 Type 5	All	25W	CO388966U045
620 Type 6	All	75W	CO464053U095
620 Type 7	All	158W	CO464053U200

The recommended EMC filters for the type 4 and 5 620 are to be mounted behind the drive module (underfloor mounting) and share the same footprint. They are suitable as standard for cubicle mount applications, as shown in figure 3-7. For wall mounting a purpose designed pressed steel conduit (Part No. BA388844) is supplied with the gland box, for mounting between the filter body and gland box is shown in the mechanical mounting drawing figures 3-8.

Figure 3-7. Filter Cubicle Mounting Details (620 types 4 & 5)

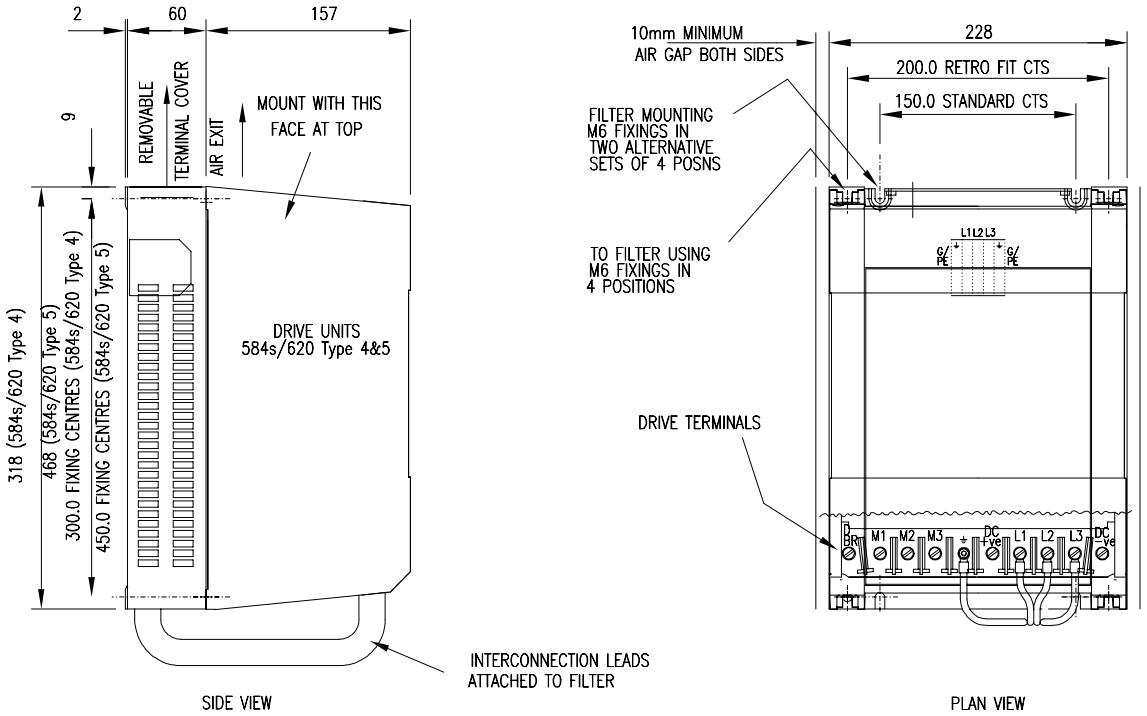

FILTER (CUBICLE) MOUNTING DETAIL

FILTERS:– C0388966U021 (18amp FOR 584s/620 Type 4)
C0388966U035 (24amp FOR 584s/620 Type 4)
C0388966U045 (38amp FOR 584s/620 Type 5)

Figure 3-8. Filter Wall Mounting Details (620 types 4 & 5).

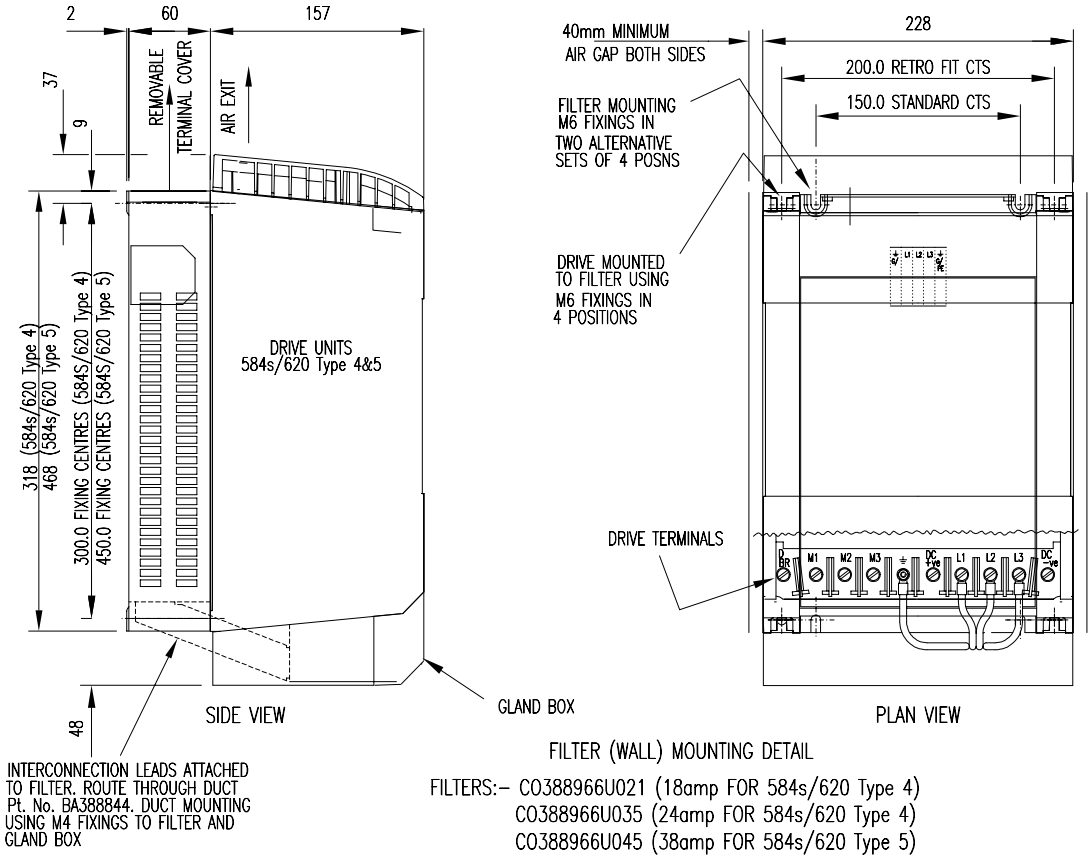

NOTE: *You must fit the 620 module with the top cover, gland box and trunking, as supplied. All interconnecting leads between the 620 and the filter must be enclosed within the duct.*

Figure 3-9. Filter Mounting Details (620 Type 6).

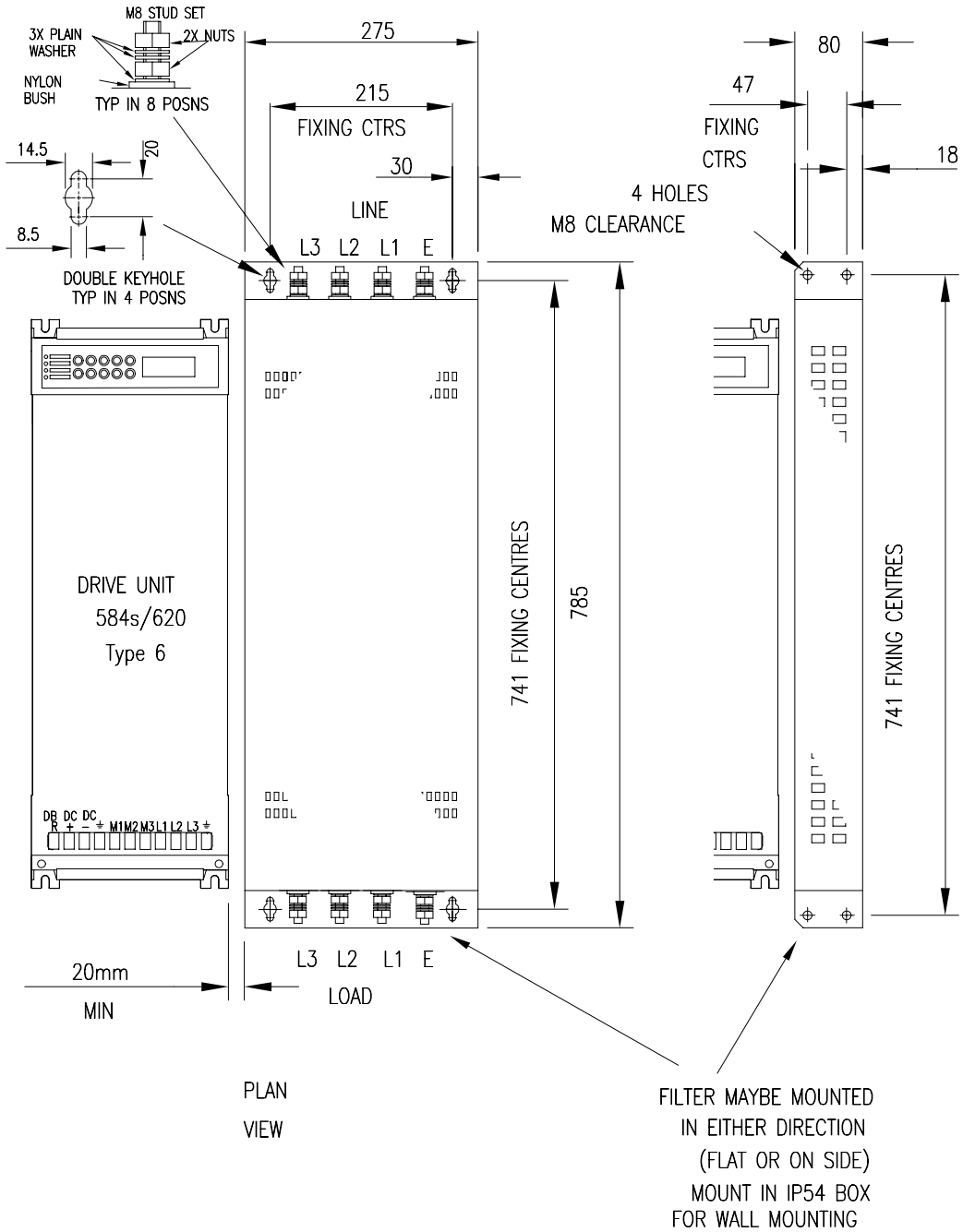

FILTER MOUNTING DETAILS

Part No CO464053U095

FOR 584s/620 Type 6

Figure 3-10. Filter Mounting Details (620 Type 7).

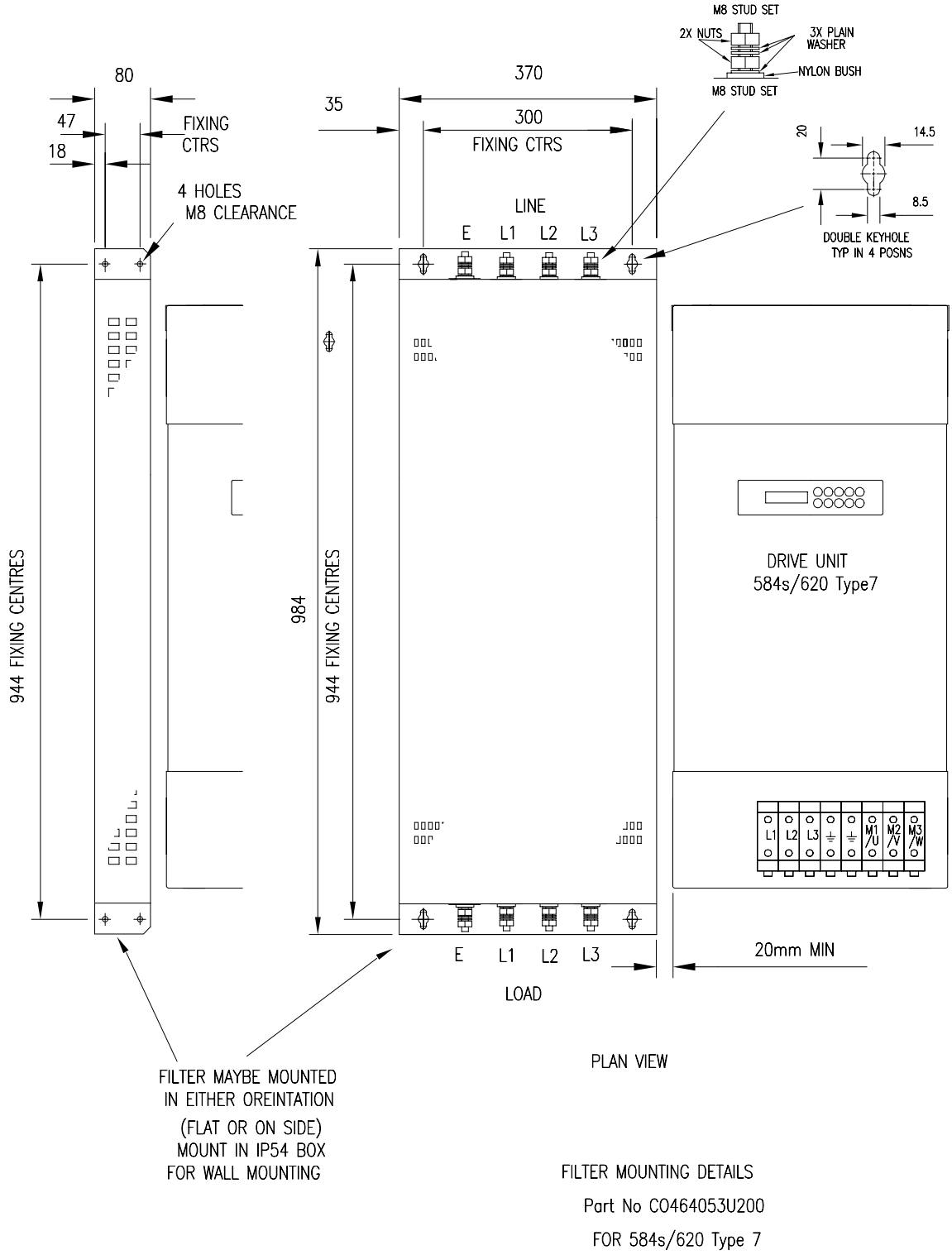

The type 6 and 7 620 filters are not of the footprint mounting design. These filters may be mounted to the left, right, above, below or spaced behind the product, but can be mounted in two orientations i) flat against the wall or ii) projecting over from the wall, mounting arrangements are shown in figures 3-9 and 3-10. Wallmount applications require the EMC filter to be mounted in a separate suitable enclosure, and the gland box to be fitted to the 620.

The EMC filter should be mounted as close to the 620 drive module as possible. The connection between the 620 and filter must always be as short as possible taking care not to obstruct any ventilation spacing and **be segregated from all other cables**. If this cable/busbar exceeds 0.3m in length then it must be replaced with a screened/armoured cable, with the screen/armour earthed at both the filter and inverter ends with large-area contact surfaces, preferably with metal cable glands. The connection between the 620 drive module and the motor must be installed away from all other cables or wires. Ideally the filter will be mounted onto the same metallic panel as the drive. The RF connection between the inverter, filter and panel should be enhanced as follows:

- Remove any paint/insulation between the mounting points of the EMC filter, 620 drive module and panel.
- Liberally apply petroleum jelly over the mounting points and securing threads to prevent corrosion. Alternatively conducting paint could be used on mounting panels.
- If the proceeding is not possible, then the RF earth bond between the filter and 620 drive module is usefully improved by making an additional RF earth connection using wire braid of at least 10 mm^2 cross sectional area (due to skin effect).
- For wall mount application, ensure that the cable between the EMC filter and the 620 drive module cable is passed through conduit mounted between the filter and the Gland Box. This cable must be as short as possible and segregated from all other cables. The conduit must be electrically connected to the filter and drive module gland box.

NOTE: **M**etal surfaces such as eloxized or yellow chromed e.g. with cable mounting or 35 mm DIN rails, screws and bolts have a high RF impedance which can be very detrimental for EMC performance.

Care should be taken to ensure that the protective earth (PE) conductor exiting from the filter is connected to the protective earth connection of the 620 drive module. Any additional RF earth such as a cable screen **is not a protective earth**. The EMC filter must be **permanently earthed** to prevent the risk of electric shock under abnormal operating instances (such as the loss of one phase of the AC supply). Permanent earthing can be achieved by either:

- Using a copper protective earth conductor of at least 10 mm^2 or
- Installing a second conductor in parallel connection with the protective conductor to a separate protective earth terminal.

Each conductor shall on its own meet the requirements for a protective earth conductor. On all recommended underfloor EMC filters two protective earth connections are provided for permanent earthing.

The recommended EMC filters are designed to operate from normal three-phases supplies which are balanced with respect to earth (earth referenced supplies). This minimises the earth leakage current due to the filter capacitors between phase and earth. On some specific customer sites the supply may not be balanced with respect to earth (non-earth referenced supplies). The earth leakage currents would increase and interfere with the operation of any earth-fault monitoring equipment. In addition the EMC performance of the filter will be degraded. Eurotherm Drives do not recommend the use of AC supply filters on non earth-referenced supplies.

As with all power electronic drives the conducted emissions increase with motor cable length. EMC conformance to the stringent limits is only guaranteed up to a cable length of 50 m (types 4, 5, 6 and 7). This length can be increased. Refer to section entitled Motor Cable-length Limitations in this chapter.

If **one EMC filter** is to be used in an enclosure, then this filter should be mounted as close to the incoming AC supply to the enclosure as possible.

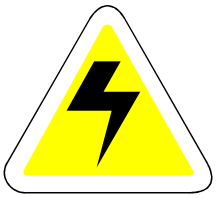

IMPORTANT WARNINGS !

The recommended EMC filters are designed to work with supplies which are balanced with respect to earth (i.e. earthed referenced supplies). On some specific customer sites the supply may not be balanced with respect to earth. The recommended standard EMC filters are not recommended be used on such supplies. Refer to Eurotherm Drives for more information.

The EMC filters contain capacitors phase-to-phase and phase-to-earth. Discharge resistors are fitted, but the filters, terminals and wiring must not be touched for a period of 5 minutes after the removal of the AC supply. **Not adhering to this warning can result in electric shock.**

The EMC filter must only be used with **a permanent earth** connection using one of the following alternatives:

a) Using a copper protective earth conductor of at least 10 mm^2 or

b) Installing a second conductor in parallel with the protective conductor to a separate protective earth terminal on the filter or inverter. The conductor on its own shall meet the requirements for a protective earth conductor.

Thermal performance of the EMC filter is only guaranteed up to a switching frequency of 6k Hz (type 4 and 5) and 3kHz (type 6 and 7), and maximum equivalent cable length of 150 m.

Refer to the following section regarding safety considerations with earth-fault detection systems.

Interaction With Earth-fault Monitoring Systems and Safety Considerations

Due to the EMC filter internal capacitors between phase and earth, on initial connection of the AC supply a pulse of current will flow in the earth. This has been minimised in the recommended EMC filters, but may still trip out any RCD (Resident Current Detector) in the earth system. In addition high frequency and DC components of earth leakage currents will flow under normal operating conditions. Under certain fault conditions, larger DC protective earth currents may flow. The protective function of some RCDs cannot be guaranteed under such operating conditions. Eurotherm Drives do not recommend the use of RCDs, but where their use is mandatory, they should be capable of correct operation with DC and AC protective earth currents (such as type B RCDs as in amendment 2 of IEC755) and have adjustable trip amplitude and time characteristics, to prevent nuisance tripping on initial power connection. RCDs used with 620 drive modules and other similar equipment are **not suitable for personnel protection**. Another means of providing personal safety must be provided for, see EN50178/VDE0160.

Minimising Radiated Emissions

All 620 drive modules can be made to comply with the most stringent radiated emission limits of EN55011 (1991) Class B by simply mounting inside an enclosure with 10 dB attenuation between 30 and 100 MHz (which would typically be the attenuation provided by a metal cabinet with no aperture greater than 0.15m) and screening any control and signal cabling outside of the enclosure. The control and signal cables should be terminated at the entrance to the enclosure. Outside of an enclosure (wall mount) all 620 drive modules will meet the Class A requirements with screening of the signal and control cables. Inside the enclosure the radiated magnetic and electric fields will be high, due to proximity, and any components fitted inside the enclosure must be sufficiently immune. Remember that the EN55011 radiated emission measurements are made between 30 MHz and 1 GHz in the far field, at a distance of between 10m and 30 m. No limits are specified lower than 30 MHz, or in close proximity. Emissions from individual components tend to be additive.

The cable between the enclosure and the motor must be screened or armoured and also contains the motor protective earth connection. The screen/armour must be earthed at both ends by connecting it to both the motor frame and the entrance to the cubicle (or gland box for wall mount), ideally in 360° termination's via cable glands (to meet the most stringent emission requirements). Screen to earth connections via 360° bonding is 75% more effective than earthing via pigtails (Note some motor gland boxes and conduit glands are made of plastic, if this is the case then braid must be connected between the screen and the chassis, in addition at the motor end ensure that the screen is electrically connected to the motor frame since some terminal boxes are insulated from the frame by gasket/paint). Often the screens are terminated on a power screen rail at the entrance to the enclosure using ‘u’ clips to achieve a near 360° screen band. The integrity of the screen must be maintained over the entire length of the cable between the enclosure and motor. If the cable is broken to insert terminals, contactors, chokes, fuses etc., then the screen must be connected over the shortest possible distance. Note some hazardous area installations may preclude direct earthing at both ends of the screen, in this case earth the other end via a 1 µF,

50VAC capacitor. The motor protective earth should be connected to the drive module motor protective earth connection.

If a shielded cable is not available, lay unshielded motor cables in a metal conduit which will act as a shield. The conduit must be continuous with a direct electrical contact to the drive module and motor housing. If links are necessary, use braid with a minimum cross sectional area of 10 mm^2 .

Safety earthing always takes precedence over EMC earthing.

The use of screened cable without an EMC filter is not recommended, as line-conducted interference will increase substantially and the capacitive coupling of the output cable to earth will result in high earth-leakage currents.

To ensure the correct operation of the 620 drive module, some control and signal cables (encoder, all analogue inputs and communications) have to be screened back to the inverter terminals. The screen integrity must be continuous right back to the drive if not connected to the cubicle. Always minimise the length of screen stripped back to make this connection. The screen should only be connected at the drive end. If high frequency noise is still a problem, earth at the non drive end via a 0.1 µF capacitor.

Screening and Earthing When Mounted in an Enclosure

Make sure the requirements of EN60204 are adhered to with electrical equipment for machines. Satisfactory EMC performance is only achievable when the 620 drive module, filter and associated equipment is mounted on a conducting metal mounting panel. Beware of constructions using insulating mounting panels or undefined mounting structures A single point earthing strategy should be followed for a single drive module mounted in an enclosure as shown in figure 3-11. The protective earth connection (PE) to the motor must run inside the screened cable between the motor and 620 drive module, where it is to be connected to the motor protective earth terminal on the drive module. (Note in accordance with EN60204 only one protective earth conductor is permitted at each earth terminal contacting point). Local wiring regulations may require the protective-earth connection of the motor to be connected locally but this will not cause shielding problems due to the relatively high RF impedance of the local earth connection.

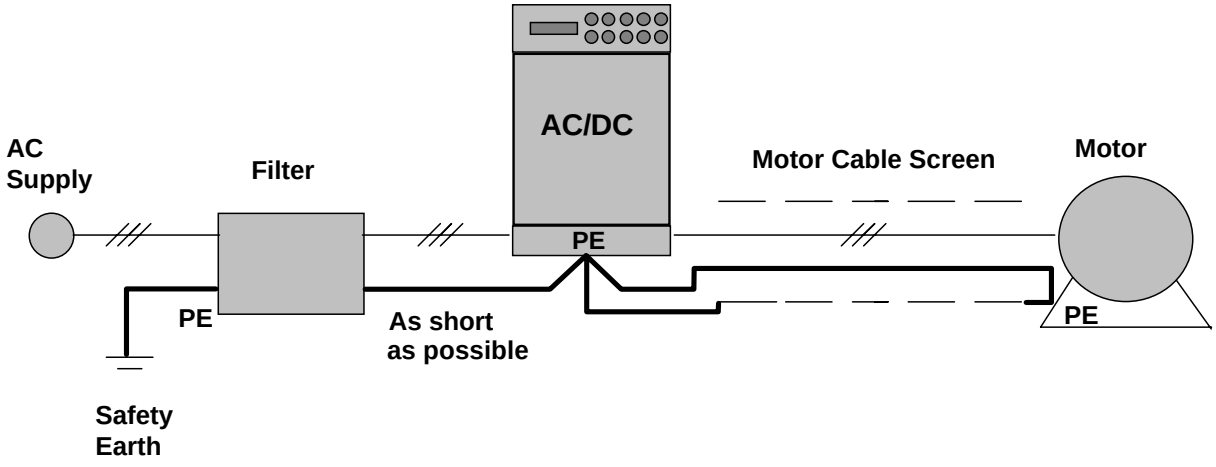

Fig. 3-11: Screening and earthing of a single 620 drive module.

When more than one piece of electrical equipment is fitted inside an enclosure, care must be taken to ensure that noise flowing in the earth connection does not couple into other equipment. A star-point earthing policy separating noisy from quiet earths is strongly recommended. Five separate earths branches should be provided for:

- Clean earth busbar — The Clean earth busbar is used as a reference point for all signal and control cabling. This may the further subdivided into an analogue and a digital reference busbar, each separately connected to the star earthing point. The digital reference is also used for any 24V control.
- Dirty earth busbar — The dirty earth busbar is used for all power earths (i.e. protective earth connections)

- Enclosure metalwork busbar — The enclosure metalwork busbar is used for all parts of the cubicle including panels, doors and back plate. It is also used as a reference for any 110 or 220V control used and for the control transformer screen.
- Power screen busbar — The power screen busbar is only for power screened cables which **do not** have to go directly to the 620 drive module (such as motor cables, braking choppers and their resistors) or to other drive modules (refer to appropriate Product Manual to identify these). Noise coupled onto the incoming screens must flow to earth directly so as not to contaminate the rest of the cubicle. Hence the power screen busbar should be placed as close to the point of cable entry as possible.
- Signal/control screen busbar — The signal/control screen busbar is to be used for signal/control screened cables which do not have to go directly to the 620 drive module. This busbar should also be placed as close as to the point of cable entry as possible.

For optimum EMC performance, copper rails with a substantial cross-section should be used for the busbar. Screened cables are best 'u' clamped to the busbars to ensure an optimum HF connection.

The five separate earth busbars should be insulated from the mounting panel and connected to a single earth point (star point) near the PE or PEN terminal of the main supply. Flexible large cross-section cable to ensure a low HF impedance should be used. The arrangement of the busbars should be such that the connection to the single earth point are as short as possible. Fig. 3-12 shows an implementation of a star-point earthing policy.

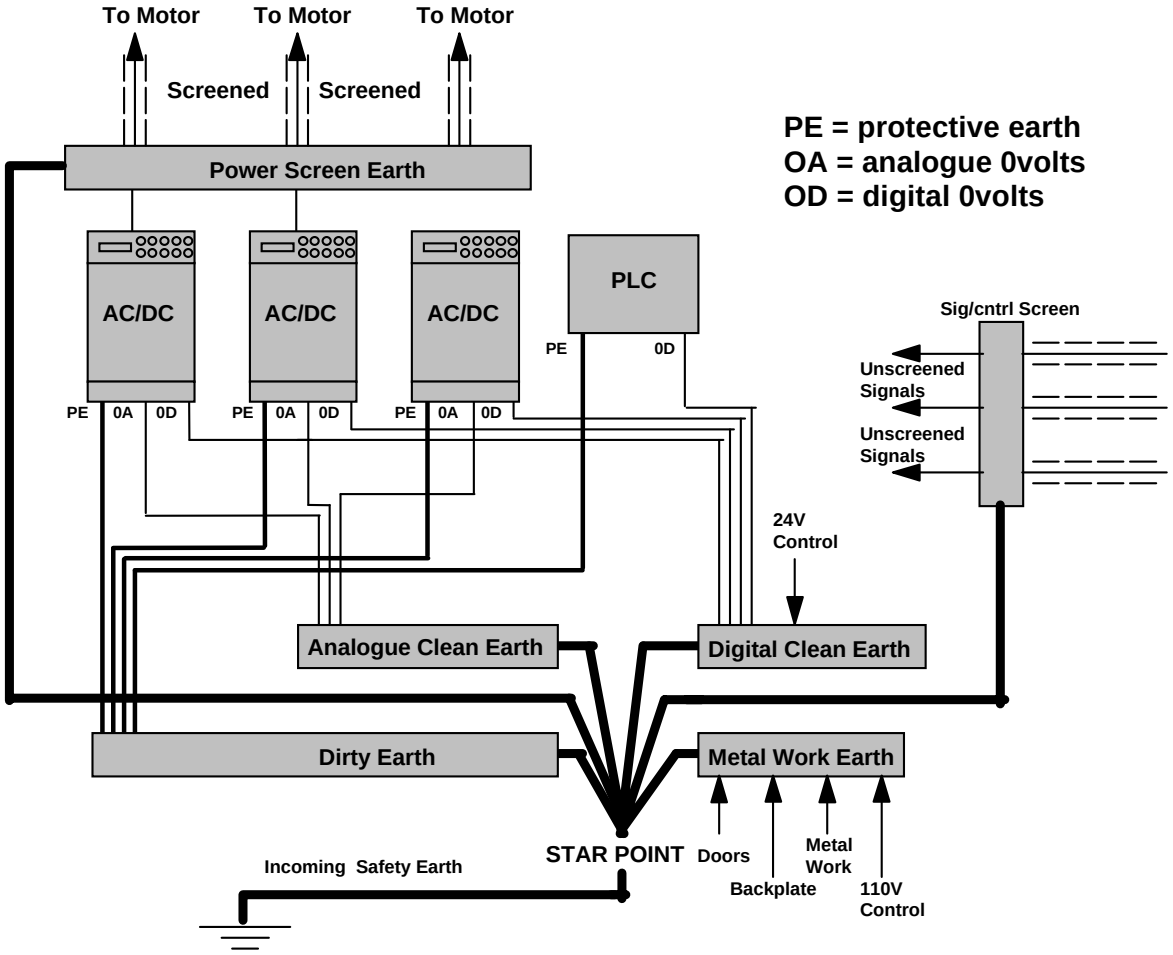

Fig. 3-12: Implementation of star-point earthing policy for multi-drive installation

Screening and Earthing When Wall Mounted

To provide for good EMC performance the recommended EMC filter must be fitted and the cables between the wall-mount 620 drive module and the motor screened or armoured. Also screening of control and signal cables may be required. Refer to the previous instructions on minimising radiated emission (page 3-22). In addition any connections to the DC link must also be screened/armoured, with the screen connected at both ends (e.g. to the protective earth of the dynamic brake resistor).

All 620 drive modules comply with the radiated emission limits of EN55011 (1991) Class A when wall mounted to these instructions, using the recommended EMC filter and screened motor control and signal cabling. Products which meet the limits of Class A can be made to meet the more stringent limits of Class B by mounting inside an enclosure with 10 dB attenuation between 30 and 100 MHz (which would typically be the attenuation provided by a metal cabinet with no aperture at a dimension greater than 0.15m) and screening any control and signal cabling outside of the cubicle. Minimise the length of unshielded cable inside the cubicle to prevent increased radiated emission.

A single-point earthing policy as shown in Fig. 3-11 is required.

The protective earth connection (PE) to the motor must run inside the screened cable between the motor and 620 drive module where it is to be connected to the protective earth terminal in the gland box or on the drive module (note, in accordance with EN60204 only one protective earth conductor is permitted at each earth terminal contacting point) . Local wiring regulations may require the protective-earth connection of the motor to be connected locally but this will not cause shielding problems due to relatively high RF impedance of the local earth connection.

The EMC filter must be permanently earthed in accordance with recommendations and warnings in the section "**EMC Filters to Reduce Line Conducted Noise"**, page 3-16.

Encoder Connections and Recommendations

Refer to figure 2.5 page 2-4 Minimum Wiring Configuration for 620 Series Drives. For EMC purposes use screened cable. Always terminate the screen at the drive. Normally the screen is terminated within the encoder housing, follow the encoder manufacturers instructions.

Motor Cable-length Limitations

Screened/armoured cable has significant capacitance between the conductors and the screen which increases linearly with cable length. Typically this is 200 pF per metre but this will vary with cable type and current rating. Long cable lengths may have the following undesirable effects:

- Tripping on 'over current' as the cable capacitance is charged and discharged at the switching frequency,
- Producing increased conducted emissions which degrade the performance of the EMC filter due to saturation. EMC compliance is only guaranteed up to a maximum cable length of 50m (type 4, 5, 6 and 7).
- Causes RCDs (Residential Current Detection) to trip out due to increased high frequency earth current.
- Produces increased heating inside the EMC AC supply filter from the increased conducted emissions. Eurotherm Drives only guarantee the thermal performance of the filters up to a specified cable length of 150m with screened cable.

These effects can be overcome by adding chokes at the output of the 620 drive module. In applications where multiple motors are connected to a single drive, minimise the length of screened/armoured cable connected to the drive by using a single length of cable to a star junction point, from where all the other motor cables are attached. Maintain the integrity of the shield. If the cable is interrupted to insert contactors or other components, the screen must be connected over the shortest possible route. Table A1 in the appendix gives information on the recommended output chokes for use with long cables, cables connected in parallel, or when EMC output filters are used with cables greater than that specified for EMC compliance.

Output filters can also be used to achieve EMC and filter thermal conformance with longer cable lengths than that specified. These output filters also ensure a long motor life by reducing the high dV/dt and over voltage stresses applied to the motor windings by inverters. These filters should be mounted as close to the 620 drive module as possible. Refer to Eurotherm Drives for the selection of suitable filters.

Other Layout Considerations

The proximity between the source and victim circuit has a large effect on radiated coupling. The electromagnetic fields produced by drive modules falls off rapidly with distance from the cabling/enclosure. It should be remembered that the radiated fields from EMC compliant drive systems are measured at least 10m from the equipment over the frequency band 30 to 1000 MHz (as required by EN55011, referenced by the generics and the drive product specific standard). Any equipment placed closer to the drive system than this will see larger magnitude fields, particularly very close to the drive. No magnetic/electric field sensitive equipment should be placed within 0.25m of the following parts of a drive system:

- 620 Drive module
- EMC output filters
- Input or output chokes/transformers
- Cable between 620 Frequency Inverter and Motor (even when screened/armoured)
- Connections to external braking chopper and resistor (even when screened/armoured)
- AC/DC brushed motors (due to commutation)
- DC link connections (even when screened/armoured)
- Relays and contactors (even if they are suppressed)

Often the coupling between electrically 'noisy' and 'sensitive' cables is a problem. This can be minimised by separating parallel runs by at least 0.25m, and minimising the length of parallel runs. For long parallel runs (>10 m) the separation should be increased proportionally. For example if the parallel runs were 50 m then the separation would be $(50/10) \times 0.25$ m = 1.25 m.

In addition the coupling between two cables which must cross is minimised if they cross over at 90°. Hence sensitive cables should cross the cables to the motor, DC link and braking chopper circuit at 90°, and should never be run close to them or in parallel for any great length.

Never run supply, DC link or motor cables in the same bundle as the signal/control and feedback cables, even if they are screened.

From experience the following equipment is defined as particularly sensitive and care must be taken in the installation:

- Any transducers which produce low level analogue outputs (<1 volt) e.g. load cells, strain gauges, thermocouples, piezoelectric transducers, anometers, LVDT's
- A.M. radios (long and medium wave only)
- Video cameras and closed circuit TV
- Office personal computers
- Capacitive devices such as proximity sensors and level transducers
- Mains borne communication systems
- Equipment not suitable for operation in the intended EMC environment i.e. with insufficient immunity to new EMC standards

Chapter 4 Setting-up and Commissioning

INTRODUCTION

This chapter describes how to use the Man-Machine Interface (MMI), the necessary steps to set up and commission an installed 620 Vector Drive.

In order to commission the drive successfully it is necessary to understand the basic operation of the MMI.

PHYSICAL DESCRIPTION

The 620 Vector Drives feature an MMI panel, shown in Figure 4.1 Man-Machine Interface (MMI), comprising a 2x16 character liquid crystal display (LCD), four function keys six command keys and four status LEDs. Programming commands and data are entered into the drive by using the function keys to navigate the MMI menu structure and setting various parameters. The LCD and function keys provide a means of tailoring the drive for individual application requirements, monitoring performance and basic operation of the drive. The status LEDs show the condition of the drive.

The Command keys provide a means of locally operating the drive.

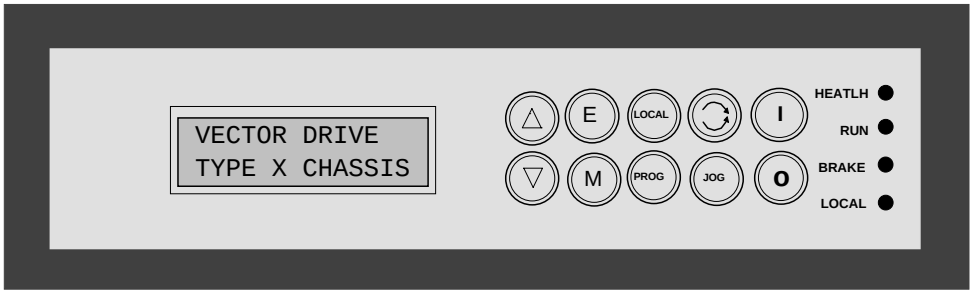

Figure 4.1 Man-Machine Interface (MMI)

MAN-MACHINE INTERFACE (MMI)

The physical parts of the MMI comprise the LCD display and function keys. The software element comprises an extensive menu system.

Display and Menu

The MMI display comprises two lines of plain text information to provide access to the various menu options and parameters. The top line contains the title of the current menu or parameter and the second contains either one of the options within the menu, or the value or status of the parameter.

NOTE:

There are two user views of the MMI, REDUCED and FULL. The reduced view significantly simplifies the MMI structure by removing the more advanced menu entries.

These views may be selected under

MENUS::FULL MENUS = TRUE/FALSE.

Definition of terms

Certain terms have specific meanings in the context of the MMI. The most common of these are defined as follows.

Default	A value which is pre-programmed into the 620 Vector drive during manufacture and which may be changed if required. Note that it is possible to completely reset all parameters to their default settings by following the procedure "Reset to Defaults" later in this chapter.
Diagnostic	A displayed status indicator which can be used to determine the health or operational mode of the drive. Diagnostics are Read Only.
Local Mode	A special operational mode of the drive where basic operations are controlled directly from the front panel (MMI) rather than by reference to external inputs. The opposite to this is Remote.

Operator station	The MMI, when it is being used in LOCAL MODE to control the motor speed setpoint directly. Can Also be used to describe the MMI and command buttons as a whole.
Parameter	Any variable (user input number) such as `RAMP ACCEL TIME` etc. Parameter names are shown in this chapter **`LIKE THIS`**. They are usually shown with their associated menu trail (i.e. how you get to them from the top level), such as **`DIAGNOSTICS::SPEED FEEDBACK`**, where the double colon indicates a progression through one menu level. (A complete menu map the appendix).
Setpoint	The speed at which a motor is set to run at (expressed as a percentage of the maximum speed which is programmed for the set-up).
Parameter Save	The PARAMETER SAVE option enables the user to store the setup parameters after adjustment. Unless the user carries out this operation the entered settings will be lost if the power is removed from the Drive.

Function Keys

The four function keys allow the user to move around the menu structure on the display, alter parameters or manually control the drive. Each key is identified by a legend. The following section identifies each key by its legend and describes its function.

MENU

The MENU select key allows the user to access the menu level or function indicated on the bottom line of the display. This key does not alter any of the stored drive parameters. Pressing this key while in LOCAL MODE (LOCAL LED illuminated) shows the actual speed of the motor as a percentage of the maximum speed.

If `FULL MENUS` are enabled then pressing the ‘M’ key while displaying a tag value will display its’ TAG number.

ESCAPE

The ESCAPE key allows the user to select the preceding menu level. It does not alter any of the stored drive parameters.
The ESCAPE key always takes you back to the previous point where you were working.

UP

When in the menu structure, pressing the UP key steps through the options or settings for the currently displayed menu option. This will either result in displaying different menu options or stepping through available settings for the selected parameter. Numerical values are incremented by the UP key. If the current entry is connected to another tag then the source tag number will be displayed, along with the current tag’s number.

Pressing this key while in LOCAL MODE (LOCAL LED illuminated) increases the speed reference. The speed of the motor is shown on the display (while the button is pressed) as a percentage of the maximum speed.

DOWN

When in the menu structure, pressing the DOWN key steps through the options or settings for the currently displayed menu option. When you are stepping through text displays (e.g. menu options), the DOWN key steps in the opposite direction from the UP key. If the current entry is connected to another tag then the source tag number will be displayed, along with the current tag's number.

Numerical values are decremented by the DOWN key.
Pressing this key while in LOCAL MODE (LOCAL LED illuminated) decreases the speed reference. The speed of the motor is shown on the display (while the button is pressed) as a percentage of the maximum speed.

Command Keys

The six command keys allow the user to start / stop and jog the drive directly from the op station. The following section identifies each key by its legend and describes its function. The Up and Down Keys also take on command functions in Local mode.

LOCAL/REMOTE

This key toggles between the normal operating mode (REMOTE) and the LOCAL control mode. It only works when the motor is stopped.
When in LOCAL MODE the LOCAL LED is illuminated, and the MMI buttons START, STOP, JOG, REVERSE, UP and DOWN can be used to control the motor speed and direction.
Press the LOCAL button to return to REMOTE MODE, the MMI will return to the last accessed place in the main menu.

PROG

When in LOCAL MODE, pressing the PROG button switches back to the main MMI menu. At the point it was last accessed from REMOTE MODE, while still remaining in LOCAL MODE. This enables changes to be made to parameters not available in the LOCAL MODE menu.
This button has no function in REMOTE MODE.

FORWARD/REVERSE

When in LOCAL MODE, the FORWARD/REVERSE button changes the sign of the speed reference. When you press this button, the display changes to indicate the new direction of rotation.
When in JOG mode (see below), this key selects between the two jog speeds.
This button has no function in REMOTE MODE.

JOG

When in LOCAL MODE, pressing this button runs the motor at the speed set by the **JOG SPEED**[1] parameters. The motor only runs in jog mode while the button is pressed.
This button has no function in REMOTE MODE.

START

When in LOCAL MODE, pressing this button starts the motor running[1]The motor will continue to run at the selected speed until the STOP button is pressed .
This button has no function in REMOTE MODE.

[1] JOG and START require the inputs COAST STOP, FAST STOP and ENABLE to be high before they will operate.

0 STOP

When in LOCAL MODE, pressing this button stops the motor if it is running. While stopped, the drive remembers the direction and speed at which the motor was running and will resume to those settings if the START button is pressed.
This button has no function in REMOTE MODE.

Summary of MMI Keys

M Goes down a level

E Goes up a level.

△ **EITHER** Accesses other parameters in the same menu level

▽ **OR** Modifies the selected parameter.

Status LEDs

The status LEDs give instant diagnostic information on the condition of the drive. When the LEDs are lit they indicate the following information:

HEALTH	The drive is powered up and there are no alarms present (the drive is healthy). HEALTH is reset by RUN going high and the drive running.
RUN	The RUN digital input is active, the motor is running and there are no alarms present. If the LED is flashing fast, this indicates that the output current has exceeded the selected I*T threshold. The LED flashes slowly during Autotune (described later).
BRAKE	If this LED is on, it indicates that the DC link voltage inside the drive has risen above the dynamic braking threshold. Chapter 3 "**DYNAMIC BRAKING**" describes this in more detail.
LOCAL	This LED indicates the drive is in LOCAL MODE when illuminated.

NAVIGATING THE MMI MENU STRUCTURE

The MMI comprises several hundred menu options (shown in Figure 4.3). The M E △ and ▽ buttons navigate through the menus.

When the 620 Vector drive is initially powered up, the MMI displays the start-up screen. Pressing M activates the menu structure.

The △ and ▽ buttons step between main menu options of the same level.

The M button selects the displayed menu option, which will either lead to a further sub-menu or to an adjustable parameter.

When an adjustable parameter is displayed, the △ and ▽ buttons adjust the value up and down.

The E button steps up a level (either from a parameter to a menu option or from a menu option to the next highest level menu).

The process of stepping through the menus and adjusting parameters is illustrated in Figure 4.2.

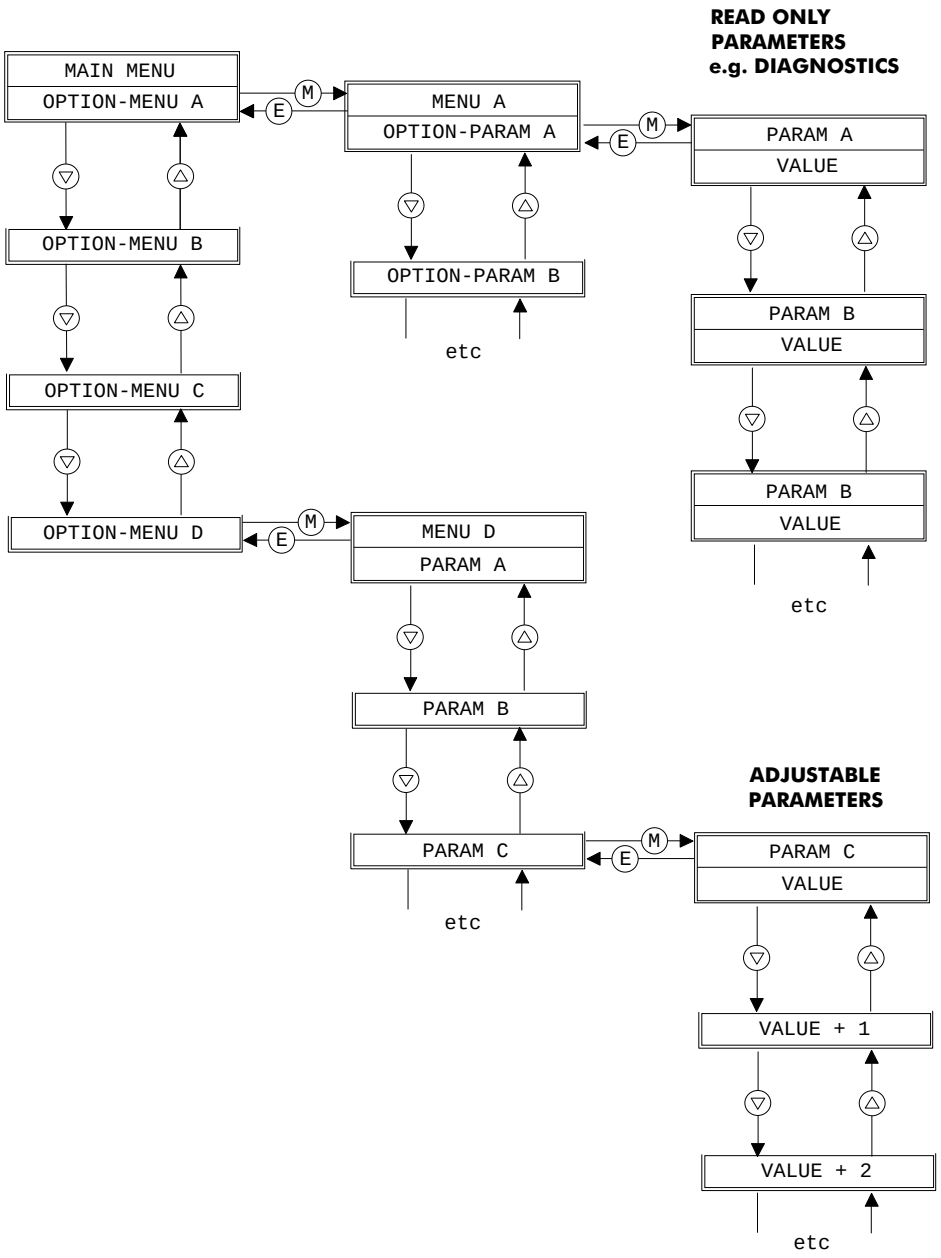

Figure 4.2 - Using the MMI

Menu Structure

The options available to the user from the main menu are given in Figure 4.3. These options are briefly described in the following paragraphs which include references for further details.

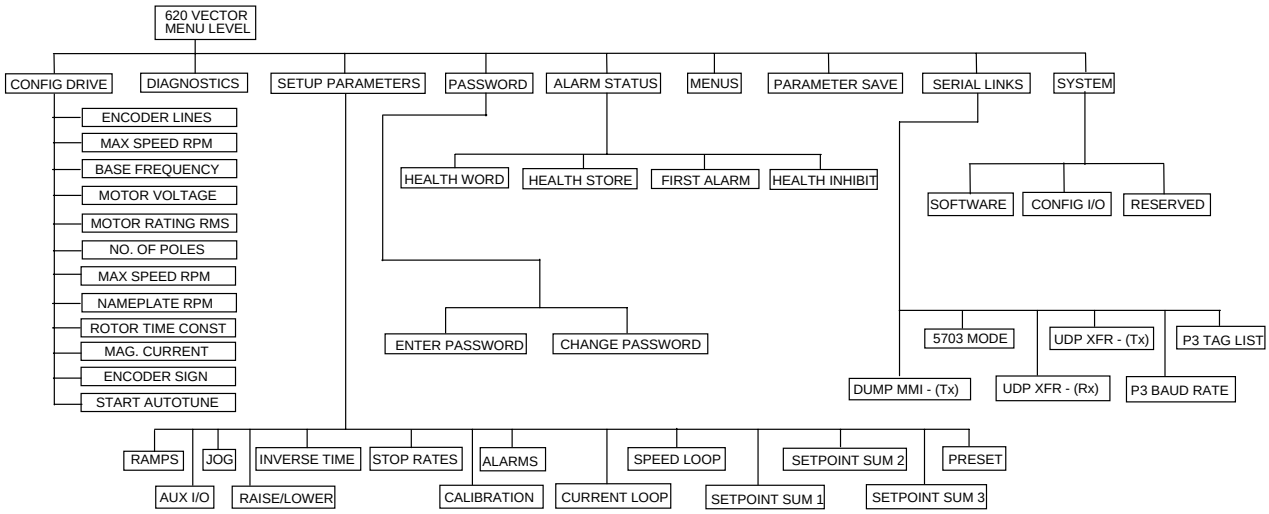

Figure 4.3 - Main Menu Options

Configure Drive

The CONFIGURE DRIVE option provides a fast track to commissioning a new 620 Vector drive. It contains all the parameters necessary for basic operation, grouped together under one menu. This will be described under 'Setup Step 4' later in this chapter.

Diagnostics

The DIAGNOSTIC option provides the user with access to read-only displays of the various drive status parameters. Refer to Chapter 5 for further details.

Set-up Parameters

The SETUP PARAMETERS option provides the user with the facility to adjust and set a large number of drive parameters. Refer to "**SETUP PARAMETERS**" in this chapter for further details.

Password

The PASSWORD option allows the user to protect the setup parameters from being changed by an unauthorised user. Procedures for setting and changing passwords are included in "**PASSWORD**" in this chapter.

Alarms

The ALARMS option provides access to the last alarm message. If the drive trips, the MMI display immediately shows an alarm message indicating the reason for the trip. This message can be cleared using the ESCAPE key (E), but can be re displayed via the ALARMS menu. Possible alarm messages are explained in Chapter 5.

Menus

The MENUS option allows the user to select the language in which the text appears.

Parameter Save

The PARAMETER SAVE option enables the user to store the setup parameters after adjustment.

Serial Links

The SERIAL LINKS option allows access to the serial link setup parameters which are used to configure the RS232 port: P3 (fitted as standard).

System

The SYSTEM option enables the user to set re configurable input and output control board connections. Refer to "**SYSTEM**" for further details.

SETTING-UP PROCEDURE

Warning

ELECTRIC SHOCK HAZARD

WAIT 3 MINUTES AFTER POWER IS DISCONNECTED BEFORE WORKING ON ANY PART OF THE SYSTEM OR REMOVING THE TERMINAL COVER FROM THE DRIVE

Setup Step 1 Before You Start

1. Before power is applied to the system the following items should be checked:
2. Mains power supply voltage is correct for the drive type.
3. Motor is of correct voltage rating and is connected in either star or delta as appropriate.
4. An encoder of the correct type is fitted to the motor properly with no plug. A, Ä, and B, B, are connected to the drive. See Table 2.2.
5. All external wiring circuits such as Power connections, Control connections, Motor connections, Earth connections are properly connected and secure.
6. Check for damage to equipment. Do not attempt to operate the equipment if damage is found.
7. Check for loose ends, clippings, drilling swarf, etc., lodged in the drive or ancillary equipment. Do not attempt to operate the equipment until any such foreign objects have been completely removed.
8. If possible check that the motor can be turned freely and that the motor cooling fan is intact and free of obstructions.

Setup Step 2 Ensure The Safety Of The Complete System

Next ensure the safety of the complete system when the drive is energised. In particular ensure:

1. That no personnel are at risk of injury or inconvenience when the drive system is energised.
2. That rotation of the motor in either direction will not cause damage.
3. That other equipment will not be adversely affected by powering up.

Caution

Before carrying out any high voltage insulation resistance checks with a Megger or similar device or performing point to point checking with a buzzer it is essential to completely disconnect the 620 Vector drive. Failure to comply may result in equipment damage and/or misleading results.

Setup Step 3 Prepare To Energise

Prepare to energise the drive and system as follows:

1. Prevent application of the main power supply by removal of the supply fuses or isolate via supply circuit breaker.
2. Disconnect the load from the motor shaft, if possible.
3. If any of the drive control terminals are not being used then refer to Chapter 2, Table 2.5 to check whether these unused terminals need to be tied high or low.
4. Check the external run contacts are open.
5. Check the external speed setpoint controls are all set to zero.

Setup Step 4 Power On

Once all the preceding steps are completed and understood, the supply fuses or circuit breaker may be replaced and power applied to the drive.

Setting up the drive consists of:

Setting up basic motor parameters via the MMI.

Running Autotune to set up magnetising current and slip.

Tuning the speed loop for the particular application.

Initial Setup

When the 620 Vector drive is switched on, the HEALTH LED should light. The remaining 3 LEDs should be off and the power-up message should appear on the MMI display as follows:

620 VECTOR DRIVE
TYPE X CHASSIS

1. Press M M. The display will show **'MENU LEVEL / DIAGNOSTICS'**. Pressing the △ and ▽ buttons will enable you to move around the top level menu. Press △ until the display shows **CONFIGURE DRIVE** (if you miss **CONFIGURE DRIVE** or any other menu item, either use the ▽ button to get back or keep pressing △ until **CONFIGURE DRIVE** is displayed again). You will be navigating the Initial Setup menus shown at the extreme left of Fig 4.3.
2. Ensure that the **'CONFIGURE DRIVE'** menu is selected on the display. Press M to enter this menu. When you enter the menu, the first parameter to appear on the display will be **ENCODER LINES**. Other parameters may be selected by means of the △ and ▽ buttons. Locate **ENCODER LINES** and press M to select this parameter. Use the △ and ▽ buttons to enter the number of lines on the encoder. When you have entered the correct number of encoder lines, press E to return to the previous level where the remaining parameters may be accessed.
3. Press ▽ to select **MAX SPEED RPM** and then press M. This entry sets the maximum rotation speed for the process, and can be up to 9 times the motor base speed printed on the nameplate if required. (This speed will be the 100% speed referred to elsewhere in the MMI). Use the △ and ▽ buttons to set the **MAX SPEED RPM** parameter to the required figure. Press E.
   It is important at this stage to set **MAX SPEED RPM** to the highest value that you are likely to be using. This is because the autotune will only set up the magnetising current values up to this speed. If at a later stage you wish to run the motor faster then it will be necessary to re-run the autotune. To avoid this inconvenience, set up **MAX SPEED RPM** to a high value now, and reduce it after autotune if required. The maximum motor speed should not of course be exceeded.
4. Press ▽ to select **BASE FREQUENCY** and then press M. Read the motor power supply frequency from the motor nameplate (typically 50Hz or 60 Hz) and use the △ and ▽ buttons to set the **BASE FREQUENCY** parameter to the same figure. Press E.
5. Press ▽ to select **MOTOR VOLTAGE** and then press M. Read the motor power supply voltage from the motor nameplate and use the △ and ▽ buttons to set the **MOTOR VOLTAGE** parameter to the same figure. Press E.
6. Press ▽ to select **MOTOR RATING RMS** and then press M. Read the motor full-load current from the motor nameplate and use the △ and ▽ buttons to set the **MOTOR RATING RMS** parameter to the same figure. Press E.
7. Press ▽ to select **NO.OF POLES** and then press M. Read the number of poles from the motor nameplate. This number must be divisible by 2, e.g. 2, 4, 6, 8 etc. or an error will be generated later. Use the △ and ▽ buttons to set the **NO.OF POLES** parameter. Press E.
8. Press ▽ to select **NAMEPLATE RPM** and then press M. Read the base speed from the motor nameplate, and use the △ and ▽ buttons to set the **NAMEPLATE RPM** parameter to the specified figure. Press E. It is important to enter this value exactly as it appears on the nameplate. For example, if it appears on the nameplate as 1450rpm, DO NOT round it up to 1500rpm.

9. Press ▽ to select **MAG CURRENT %** and then press M. Read the "no load current" from the motor nameplate, and use the △ and ▽ buttons to set the **MAG CURRENT %** parameter to the specified figure ((No Load Current / Motor Rating RMS) * 100%). Press E.
   If the "no load current" is not available, set the **MAG CURRENT %** to 30-40% for motors less than 30kw and 20-30% for motors > 30kw.

10. Press ▽ to select **ROTOR TIME CONST** and then press M. This parameter sets up an initial estimate of the rotor time constant which Autotune will later optimise. For motors up to 2.2kW use 100.0ms, between 2.2kW and 7.5kW use 200.0ms, between 7.5kw and 22kW use 400.0ms and for larger motors use 800.0ms. Use the △ and ▽ buttons to set the **ROTOR TIME CONST** parameter to the required figure. Press E.

11. At this point almost all of the required basic parameters have been entered and further parameters can only be determined by running the drive. All the parameters should now be saved. To save the parameters, press E △ M which will select **SAVE PARAMETERS** option, and then press M. Press △ to save the parameters. The display will say **FINISHED** after a second or so when the process is complete. Press E ▽ M to return to the Configure Drive menu.

Caution

When power is removed from the product it must not be re-applied for a period of 30 seconds to allow the inrush limit circuit to operate correctly.

Setup Step 5 Run the drive

The next step is to run the drive.

Warning

- **UNPREDICTABLE MOTION,** ESPECIALLY IF MOTOR PARAMETERS ARE INCORRECT.
- ENSURE NO PERSONNEL ARE IN THE VICINITY OF THE MOTOR OR ANY CONNECTED MACHINERY.
- ENSURE THAT THE EMERGENCY STOP CIRCUITS FUNCTION CORRECTLY BEFORE RUNNING THE MOTOR FOR THE FIRST TIME.
- WHEN THE DRIVE IS RUN FOR THE FIRST TIME ROTATION WILL BE OF UNKNOWN DIRECTION, MAY BE JERKY AND SPEED CONTROL MAY NOT OPERATE CORRECTLY.
- ENSURE THAT NO MACHINERY CONNECTED TO THE MOTOR WILL BE DAMAGED BY UNPREDICTABLE MOTION.

1. Press LOCAL to put the drive into LOCAL MODE. The LOCAL LED should light.

2. Use the △ and ▽ buttons to set a speed demand of between 5% and 10% of full speed (the actual value is not critical).

3. Press I to start the motor. The RUN LED should illuminate. (If any error messages occur on the MMI, refer to Chapter 6, "**Diagnostics**").

4. Listen to and look at the motion of the motor. If the encoder sign is correct the motor will rotate smoothly and respond to changes in speed demand or direction. To check this, use the △ and ▽ buttons to increase the speed to about double the first figure, and then use the ⟲ button to change the direction of rotation. If it accelerates and changes direction smoothly, this confirms that the encoder sign is set correctly.

5. If the ENCODER SIGN is incorrect, the motor will rotate in a jerky and/or noisy manner. Alternatively, it may rotate smoothly at a very low speed but not respond to changes in speed demand or direction. In either case the encoder sign must be changed. Paragraph 7 describes how to change the encoder sign.

6. If the motor rotates in the wrong direction, press O to stop the motor then power down the entire drive assembly, wait 3 minutes for the DC Link capacitors to discharge then swap motor drive cables M1 and M2. Re-start the Initial Setup procedure from step 1. The encoder sign will have been changed by the change in motor direction as described in step 4.

7. Press (0) to stop the motor, then press (LOCAL) to put the drive back into REMOTE MODE.
8. If the **ENCODER SIGN** needs changing, go into the **'CONFIGURE DRIVE'** menu and select **ENCODER SIGN** , then press (M). Use the (△) and (▽) buttons to set the **ENCODER SIGN** parameter to the other setting. Press (E).
9. This completes the initial part of the setting up phase. At this point the motor is running under control, but it is not optimised for smooth, efficient running. The next step is to Autotune the drive to automatically set up the remaining basic parameters.

Setup Step 6 Autotuning the Drive

The purpose of the Autotune function is to set up the magnetising current and rotor time constant for this motor.

This is a two-stage process. The first stage runs the drive up to various speeds to tune the magnetisation current. The second stage calculates the rotor time constant from the **MAG CURRENT** and motor nameplate details which you entered.

Caution

When the Autotune is carried out, the motor will run at base speed for several minutes.

It is essential that no load is applied to the output shaft for the Autotune to function correctly. A gearbox may be permissible provided it does not significantly load the motor, but it should be disconnected where possible.

Ensure that you are in the **'CONFIGURE DRIVE'** menu. Scroll around the menu with the (△) or (▽) buttons until you locate **AUTOTUNE**. Press (M) . Press (△) to set the **AUTOTUNE** flag **TRUE**. Then restart the drive.

The drive will now accelerate first to base speed, and then to a number of other speeds, up to the value set in **MAX SPEED RPM**. At each speed it will set up the magnetising current for this motor. When it has finished, it will then calculate the rotor time constant. If any error messages occur on the MMI, refer to Chapter 6, "**Alarms**".

If the autotune fails to run, but no error message appears on the MMI, this may be due to a wrong configuration in the autotune menu. This menu contains 2 flags which control the autotune action. 'Mag I Autotune' must be set true to ensure that the mag current autotune is carried out, and 'Set Tr < Rtd Spd' must be true for the rotor time constant calculation to be done. Go into the autotune menu, under 'Setup Parameters (see 'Menu Structure' on page4-6) and ensure these flags are set to be true.

When Autotune has finished, the 620 Vector drive is set up with all the information required for basic operation as a speed controller. It is now necessary to save this information in non volatile memory, so that it will be retained when power is removed. This is done via the PARAMETER SAVE menu. See 'Parameter Save' under 'Menu Structure' on page 4-6.

At the end of the autotune process, the drive will calculate a new value of rotor time constant. If it is significantly different from the old value, it may be advisable to run the autotune again. The values of magnetising current obtained on the second pass will then be slightly more accurate, as the drive will now be using a more accurate value of rotor time constant.

Reset To Factory Defaults

Disconnect the power to the drive.

Hold down the (△) and (▽) buttons while re-applying power and keep both buttons depressed for at least two seconds after power-up

Note: The start input must also be low [B7].

The MMI display will read

SELF TEST
EEPROM NOT READ

Press (E).

The drive is now safely configured to the factory defaults. On the 620L and 620Adv these factory defaults are saved automatically, on the 620Std the factory defaults must be saved using “Parameter Save” if wished.

Change Stack Size

This is only be necessary if you are installing a new control board on an existing stack.

Warning

SELECTING A DIFFERENT STACK SIZE FROM THAT INDICATED ON THE STACK RATING LABEL WILL DAMAGE THE STACK AND OR MOTOR

Disconnect the power to the drive.

Hold down the (▼), (M) and (P) (prog)buttons while re-applying power and keep both buttons depressed for at least two seconds after power-up.

Note: The start input must also be low [B7].

The MMI display will read

DRIVE RATING
75 kW 380-460v

At this stage the 620 Vector drive thinks that it is a 75kW model. **It is vitally important that it is configured for the correct power rating or irreparable damage may occur to the drive when it attempts to run the motor.** Press the (▲) and (▼) buttons to step through the range of power ratings until the displayed value is the same as the rating on the identification label on the side of the drive.

Press the (E). to select rating.

Select whether you wish 50Hz defaults (False) or 60Hz defaults (True).

Press the (E). to exit. This saves the new settings in EEprom (non volatile memory).

Note: The drives setup parameters are unchanged.

Note: The 620L / 620Adv need to have the power cycled to reinitialise the co-processor after this procedure.

Should it ever be necessary to reset all the parameters to their factory defaults (e.g. when swapping out a drive), use the following procedure.

Chapter 5 Function Blocks

SET-UP PARAMETERS

INTRODUCTION

This section provides reference information for the more advanced programming capabilities of the 620 Vector series controllers.

Each section describes a particular functional area and the associated menu options which are used to alter the parameters. Where appropriate, a functional block diagram illustrates the how the function operates. Reference to the Functional Description and Microprocessor Block Diagram in Chapter 2 may be of assistance in understanding the relationship between these functional diagrams.

Each of the menu options (refer to Figure 5.1) has an associated 'Tag' number associated with it, which provides a unique identification. These tag numbers are shown within this section and also within Chapter 9, which holds a complete list of all tags with there ranges and defaults. Tag numbers can also be seen by pressing the ‘M’ key with FULL MENUS enabled.

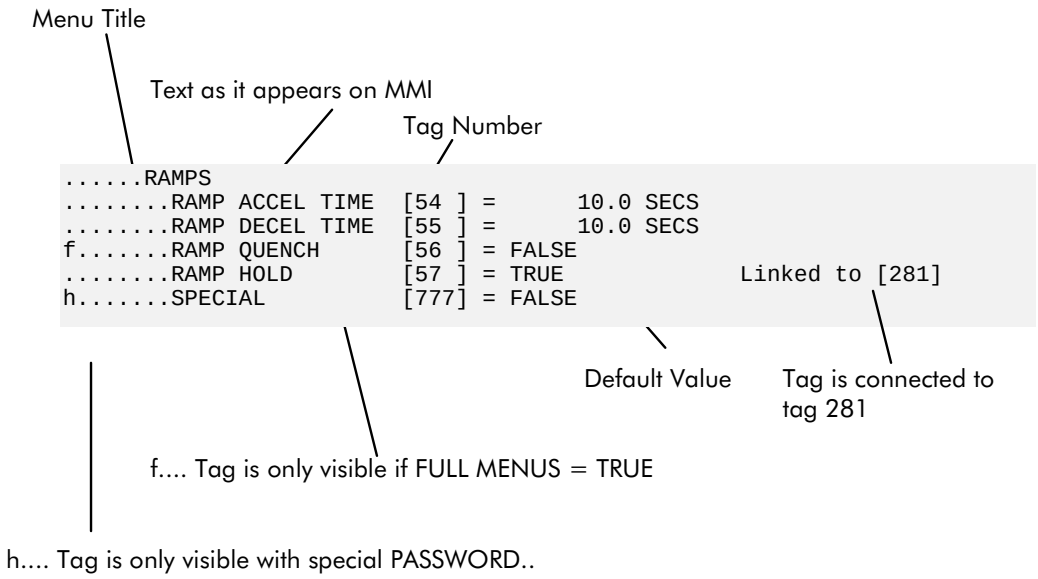

Figure 5.1 Set-up Parameter entry.

These tag numbers may be used to reconfigure the block diagram if the default configuration (shown in figure 2.17) does not provide the functionality required.

Reconfiguring is done using:

source tags

destination tags

internal links.

Analogue and digital inputs have destination tags. See section 'Configure I/O' on page 5-45. An analogue or digital input may be connected to a function block input by setting its destination tag equal to the tag number of the block input as required.

Analogue and digital outputs have source tags. See section 'Configure I/O' on page 5-45. A function block output may be connected to an analogue or digital output by setting the analogue or digital output source tag equal to the tag number of the block output as required.

Function blocks have destination tags. A function block output may be connected to the input of another function block by setting its destination tag equal to the tag number of the block input or analogue/digital output, as required. Function blocks do not have source tags. A function block output may therefore be routed to any variable, but only parameters which have a destination tag can be connected to its inputs.

5-2 Function Blocks

Internal links are used to route variables which do not have source tags or destination tags associated with them.

Source and destination tags are found in the menu 'Configure I/O' under 'System'. See 'Menu Structure' in chapter 4. This menu contains sub menus 'Analogue Inputs', 'Digital Inputs', 'Analogue Outputs', 'Digital Outputs', 'Block Diagram', and 'Internal Links'. Destination tags for analogue and digital inputs may be found under 'Analogue Inputs' and 'Digital Inputs'. Source tags for analogue and digital outputs may be found under 'Analogue Outputs' and 'Digital Outputs'. Destination tags for function blocks may be found in 'Block Diagram'. A full description of the source and destination tags available is given in section 'Configure I/O' on page 5-45.

The menu also contains the flag 'Configure Enable' which must be set to true before any re-configuring can be done. See section 'Configure I/O' on page 5-45.

EXAMPLE 1

Re-route digital input 1 (terminal E2) to the 'System Ramp' 'External Reset' (It is normally connected to 'ramp hold' by default). See 'System Ramp' diagram on page 5-3. This will cause the system ramp output to return to its reset value whenever a '1' is applied to digital input 1.

1. Go into 'System' menu, then into 'Configure I/O'.
2. Select 'Configure Enable' and set this flag to true.
3. Find 'Digital Inputs' menu and select 'DIGIN 1 (E2)'.
4. Go into this menu and find 'Destination Tag'. Set this to the 'External Reset' tag number 62, which may be found in section 'System Ramp' or in the tag number list in the appendix, chapter 9.
5. Return to 'Configure Enable' flag and set this to false.

EXAMPLE 2

Bring Current Feedback to analogue output 2 (torque demand is normally connected to this output by default).

1. Go into 'System' menu, then into 'Configure I/O'.
2. Select 'Configure Enable' and set this flag to true.
3. Find 'Digital Inputs' menu and select 'ANOUT 2 (F5)'.
4. Go into this menu and find 'Source Tag'. Set this to the 'Current Feedback' tag number 78, which may be found in the MMI list in the appendix, chapter 9, under diagnostics.
5. Return to 'Configure Enable' flag and set this to false.

EXAMPLE 3

Connect Speed Feedback to System Ramp Reset Value. This would allow the drive to start a spinning motor in a smooth manner. System Ramp Reset Value is a parameter which does not have a source tag associated with it, as it is normally a fixed value set via the MMI. Speed Feedback does not have a destination tag. So the only way to do this is via an internal link.

1. Go into 'System' menu, then into 'Configure I/O'.
2. Select 'Configure Enable' and set this flag to true.
3. Set Link 1 Source to 11 (i.e. tag number of speed feedback).
4. Set Link 1 Destination to 63 (i.e. tag number of Reset Value).
5. Return to 'Configure Enable' flag and set this to false.

RAMPS

MMI ENTRIES

```
......RAMPS
........RAMP ACCEL TIME  [54 ] = 10.0 SECS
........RAMP DECEL TIME  [55 ] = 10.0 SECS
f.......RAMP QUENCH      [56 ] = FALSE
........RAMP HOLD        [57 ] = TRUE        Linked to [281]
........RAMP INPUT       [58 ] = 0.00 %      Linked to [345]
........% S-RAMP         [59 ] = 0.00 %
........RAMPING THRESH.  [60 ] = 1.00 %
........AUTO RESET       [61 ] = TRUE
........EXTERNAL RESET   [62 ] = FALSE
........RESET VALUE      [63 ] = 0.00 %
........RAMPING          [21 ] = FALSE
........RAMP OUTPUT      [47 ] = 0.00 %
```

BLOCK DIAGRAM

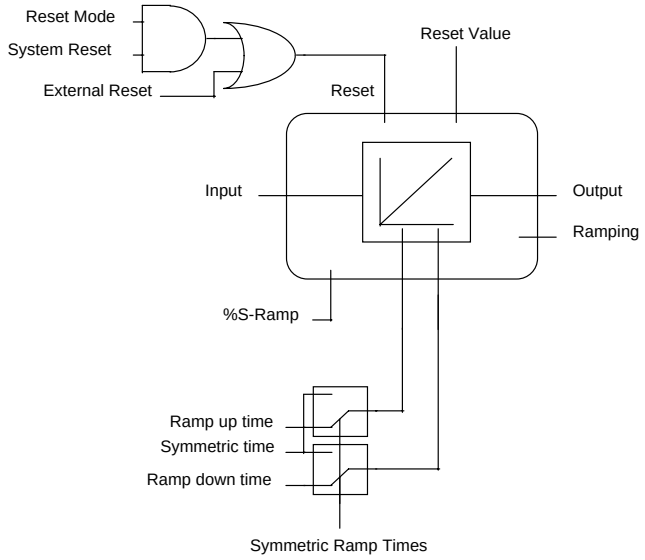

Figure 5.2 System Ramp

PARAMETERS

RAMP ACCEL / DECEL TIME Acceleration / Deceleration time. The times are for an output change from 0 to 100%.

Example:

A change of Ramp Input from 10% to 50% with an acceleration time of 60 Seconds will take. $\frac{50\% - 10\%}{100\%} \times 60 Secs$

Effect of %S on Ramp times.

$$Actual\ Ramp\ Time = Ramp\ Time \text{ x } \left[\frac{3.5}{100} \text{ x } (\%SRamp) + 1\right]$$

Zero ramp times are a special case where the ramp can be effectively by-passed.

RAMP QUENCH	While TRUE the ramp input is held at zero. NOTE: This parameter is automaticall set TRUE during a normal stop if USE SYSTEM RAMP is TRUE.
RAMP HOLD	While TRUE the ramp output is held at its last value. This is overridden by External Reset or Auto Reset.
RAMP INPUT	Ramp Input TAG.
% S-RAMP	Percentage of ramp with S-shaped rate of change. A value of zero is equivalent to a linear ramp. Changing this value affects the ramp times. See RAMP ACCEL/DECEL TIME equation.

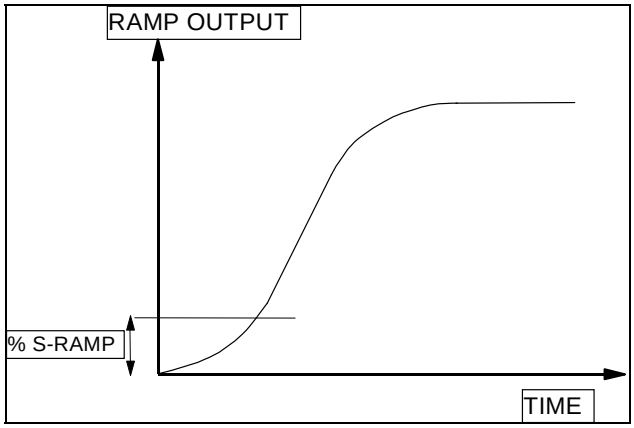

Figure 5.3 S-Ramp

RAMPING THRESH. — Ramping flag threshold level. The threshold is used to detect whether the ramp is active, shown by the ramping TAG.

```
if( |RAMP OUTPUT - RAMP INPUT| > RAMPING THRESH)
  RAMPING := TRUE
else
  RAMPING := FALSE
endif
```

AUTO RESET — If AUTO RESET is TRUE then the ramp is reset whenever SYSTEM RESET is TRUE, that is each time the Speed / Current loop is unquenched. If the drive is restarted before the stop sequence has reached stop zero speed the System Ramp will not be reset.

If FALSE then the ramp is only reset by EXTERNAL RESET.

System Reset is an internal flag that is set TRUE for one cycle after the Speed / Current loop is enabled i.e. every time the drive is started.

NOTE: Reset overrides ramp hold.

EXTERNAL RESET — If EXTERNAL RESET is TRUE then the ramp is held in reset. EXTERNAL RESET does not depend on AUTO RESET for its operation.

Ramp Reset Definition:

Ramp Reset = (System Reset AND Auto Reset) OR External Reset.

NOTE: Reset overrides ramp hold.

RESET VALUE — This value is pre-loaded directly into the output while Ramp Reset is TRUE or at power-up. In order to catch a spinning load smoothly ("bumpless transfer" or "Fly Catching") connect speed feedback TAG 7 (Source) to this reset value TAG 63 (Destination) using an internal link.

RAMPING — Diagnostic indicating the function is ramping, see RAMP THRESHOLD.

RAMP OUTPUT — Diagnostic, ramp output value.

Note: The System ramp may also be used for stopping the drive if **STOP RATES::USE SYSTEM RAMP** is **TRUE**, **AUTO RESET** is **TRUE** and **EXTERNAL RESET** is **FALSE**, in this case the Sequencer will set **RAMP QUENCH** to be **TRUE**. This will force the ramp input to zero, and only when the ramp output is zero will the stop ramp be invoked. **RAMP QUENCH** is not normally shown on the MMI.

OP-STATION

LOCAL MODE BLOCK DIAGRAM

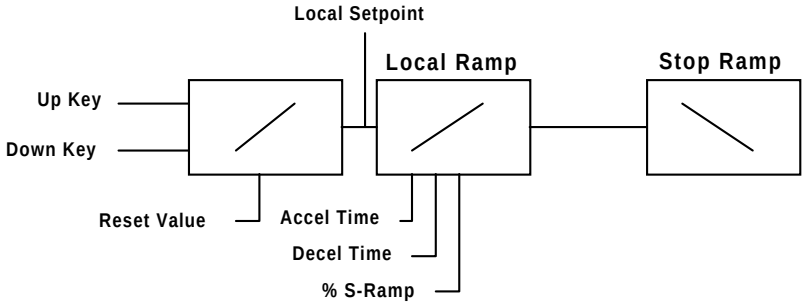

Figure 5. 4 Local Setpoint

Only active when the drive is in Local mode.

MMI ENTRIES

```
......OP-STATION
........SET UP
..........SETPOINT [507] = 0.0 %
..........LOCAL KEY ENABLE [632] = TRUE
........START UP VALUES
..........SETPOINT [503] = 0.0 %
..........REV DIRECTION [504] = FALSE
..........PROGRAM [505] = FALSE
..........LOCAL [506] = FALSE
........LOCAL RAMP
..........RAMP ACCEL TIME [511] = 10.0 SECS
..........RAMP DECEL TIME [512] = 10.0 SECS
..........% S-RAMP [516] = 0.00 %
h.........RAMP OUTPUT [509] = 0.00 %
```

PARAMETERS

SET UP

SETPOINT	Actual value of local setpoint.
LOCAL KEY ENABLE	Enables the "local key" on the op-station, this must be set TRUE to allow the operator to toggle between local and remote modes.

START UP VALUES

SETPOINT	Default Value of local setpoint on power up.
REV DIRECTION	Default Value of local direction on power up.
PROGRAM	Default mode of op-station prog. key on power up.
LOCAL	Default mode of op-station local key on power up.
LOCAL RAMP	See Ramps.
RAMP ACCEL TIME	Acceleration time used while in local mode.
RAMP DECEL TIME	Deceleration time used while in local mode.
% S-RAMP	The amount of "S" in local mode.
RAMP OUTPUT	Diagnostic.

AUX. I/O

MMI ENTRIES

```
......AUX I/O
........AUX START        [66 ] = TRUE
........START            [70 ] = TRUE            Linked to [450]
........AUX JOG          [67 ] = TRUE
........JOG INPUT        [71 ] = FALSE           Linked to [451]
........AUX ENABLE       [68 ] = TRUE
........ENABLE           [72 ] = FALSE           Linked to [452]
........REM.SE.ENABLE    [791] =  FALSE
........REMOTE SEQ       [786] =  0x0000
........SEQ STATUS       [787] =  0x0C0E
```

PARAMETERS

Aux. Start, Aux. Jog, and **Aux. Enable,** Allow the drive to be started and stopped by software.

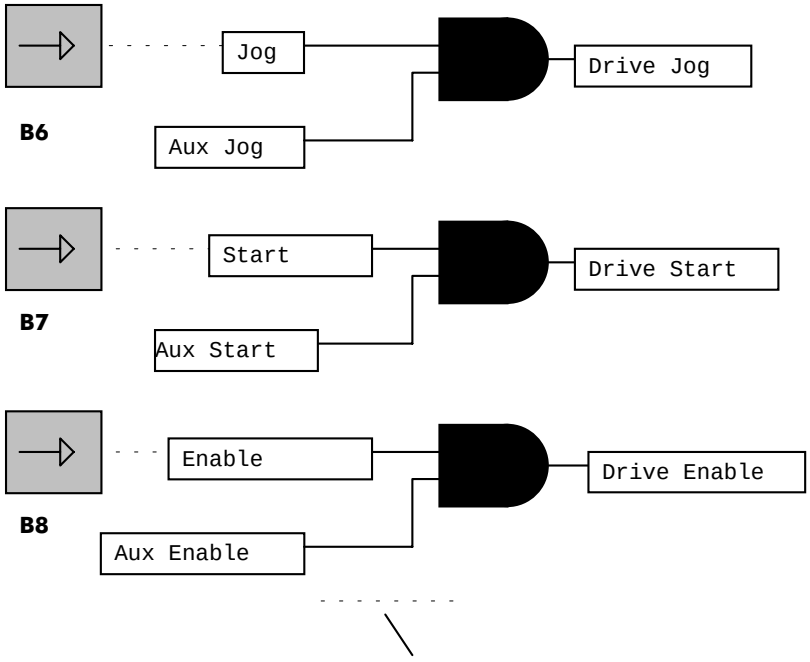

Figure 5.5 Aux. I/O

Start, Jog, and **Enable,** Also allow the drive to be started and stopped by software alone. These parameters are by default connected to there respective terminals.

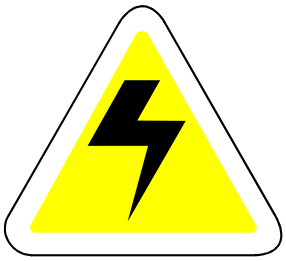

WARNING!

CARE MUST BE TAKEN IN RECONFIGURING THE START, JOG AND ENABLE INPUTS AS THESE TAGS MAY DIRECTLY ENABLE THE DRIVE.

IF THERE ARE TO BE RECONFIGURED THEN COAST STOP INPUT SHOULD UNDER OPERATOR CONTROL. THIS WILL ALLOW THE ENABLE COMMANDS TO BE OVERRIDDEN.

REMOTE SEQUENCING

The Remote Sequencing parameter allows the basic sequencing of the drive to be controlled from a remote source using a single hexadecimal word. Before any remote command is accepted, REM.SEQ.ENABLE must be set TRUE while the drive is in the stopped state. The REMOTE SEQ. Bits are forced to zero while the REM.SEQ.ENABLE = FALSE.

The state REMOTE SEQ is not saved in non-volatile memory.

REMOTE SEQ TAG 786

Reserved bits are undefined when read and should be set Zero when written.

Bit Number	Mask	Name	Comment
0 (lsb)	0x0001	Remote Enable	
1	0x0002	Remote Start	
2	0x0004	Remote Jog	
3	0x0008	Remote Jog Mode	Selects Jog Speed
4	0x0010	Reserved	
5	0x0020	Reserved	
6	0x0040	Reserved	
7	0x0080	Reserved	
8	0x0100	Remote Alarm Ack	Alarm Acknowledge
9	0x0200	Remote /Remote Trip	Remote Trip (High for OK)
10	0x0400	Reserved	
11	0x0800	Reserved	
12	0x1000	Reserved	
13	0x2000	Reserved	
14	0x4000	Reserved	
15	0x8000	Reserved	

SEQ STATUS TAG 787 (READ ONLY)

Reserved bits are undefined when read.

Bit Number	Mask	Name	Comment
0 (lsb)	0x0001	Coast Stop	Coast Stop demanded
1	0x0002	Program Stop	Program (Fast) Stop demanded
2	0x0004	Disable	/Enable demanded
3	0x0008	Run	Drive Start demanded
4	0x0010	Jog	Drive Jog demanded
5	0x0020	Reserved	Undefined
6	0x0040	Alarm	Unacknowledged alarm (Health Store != 0)
7	0x0080	Reserved	Undefined
8	0x0100	Running	Contactor in and drive ready to be enabled
9	0x0200	Enabled	Drive is enabled.
10	0x0400	Zero Speed	Zero speed Output TAG 17
11	0x0800	Healthy Output	Healthy Output TAG 12
12	0x1000	Ready	Ready Output TAG 559
13	0x2000	Reserved	Undefined
14	0x4000	Reserved	Undefined
15	0x8000	Reserved	Undefined

EXAMPLE BIT PATTERNS

Sequence Status	Comment
0001 1011 0000 1011	Running
0000 0100 0100 1011	Tripped, Run High
0000 0100 0100 0111	Tripped, Run Low, Enable Low
0000 1100 0100 0111	Trip Acknowledged, Healthy o/p TRUE Alarm stays high until drive is restarted.

USEFUL COMMANDS USING EI-ASCII (REMOTE SEQ TAG 786 MNEMONIC "LU")

	/Remote Trip	Alarm Ack	Jog Mode	Jog	Start	Enable	Command
Start Drive	1	0	X	0	1	1	lu>0203
Stop Drive	1	0	X	0	0	1	lu>0201
Disable Drive	1	0	X	X	X	0	lu>0200
Jog Setpoint 1	1	0	0	1	0	1	lu>0205
Jog Setpoint 2	1	0	1	1	0	1	lu>020C
Remote Trip	0	0	X	X	X	X	lu>0000
Reset Alarm a)	1	1	0	0	0	0	lu>0300
Reset Alarm b)							Healthy Output Bit 11
Reset Alarm c)	1	0	50	0	0	0	lu>0200

DRIVE ENABLE

To Enable the drive in remote mode the following parameters must be TRUE, REM.SEQ.ENABLE[791] AND `REMOTE SEQ` [786] BIT 1.

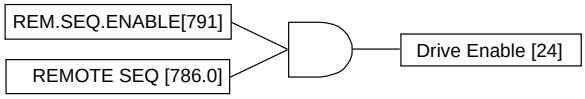

DRIVE START

To Start the drive in remote mode the following parameters must be TRUE, REM.SEQ.ENABLE[791] AND `REMOTE SEQ` [786] BIT 0.

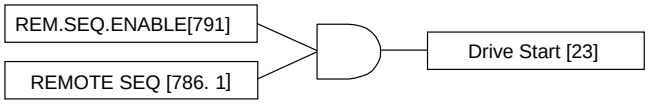

DRIVE JOG

To Jog the drive in remote mode the following parameters must be TRUE, REM.SEQ.ENABLE[791] AND `REMOTE SEQ` [786] BIT 3.

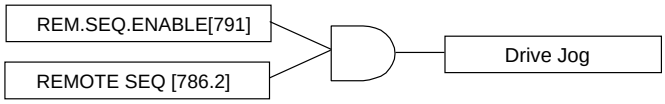

JOG MODE

To select the jog setpoint in remote mode the following parameters must be TRUE, REM.SEQ.ENABLE[791] AND `REMOTE SEQ` [786] BIT 4.

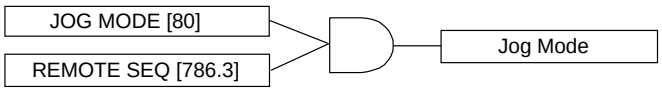

ACK ALARM

To Acknowledge and alarm both the following parameters must be TRUE, `ACK ALARM` [166] AND `REMOTE SEQ` [786] BIT 8. NOTE: if remote sequencing is not enable then `REMOTE SEQ` [786] BIT 8 is forced TRUE

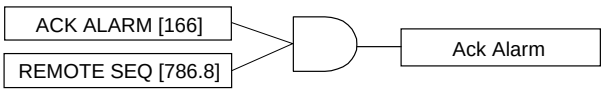

REMOTE TRIP ALARM

The Remote trip alarm is designed to signal a network fault to the drive. When using the 6204 Profibus interface, all outputs are set to zero on link fail. If one of the outputs is REMOTE SEQ [786] the drive will trip after a delay specified by Remote Delay. The Drive will then need a low - > High transition on Ack Alarm and Start before the drive may run again.

Remote Inhibit [788]	Remote Delay [790]	Remote Trip [789]
Disable remote trip.	Delay before trip becomes active after bit being cleared.	Status of the Remote trip alarm, OK, Warning (Remote Seq. Bit 9 FALSE and delay not expired), Active (Trip active, timer expired and remote not inhibited).

JOG

MMI ENTRIES

```
........JOG SPEED 1      [75 ] = 10.00 %
........JOG SPEED 2      [76 ] = -10.00 %
........MODE             [80 ] = FALSE
........JOG ACCEL RATE   [113] = 10.0 SECS
........JOG DECEL RATE   [114] = 10.0 SECS
```

PARAMETERS

JOG SPEED 1	Drive setpoint during Jog if Mode = FALSE
JOG SPEED 2	Drive setpoint during Jog if Mode = TRUE
MODE	Selects Jog Speed to be used.
JOG ACCEL RATE	Acceleration rate used by Jog
JOG DECEL RATE	Deceleration rate used by Jog
NOTE:	The ACCEL / DECEL rates and the setpoints apply to both local and normal operating modes.

RAISE LOWER RAMP

MMI ENTRIES

```
......RAISE/LOWER
........RESET VALUE      [82 ] = 0.00 %
........RAMP RATE        [83 ] = 60.0 SECS
........RAISE INPUT      [85 ] = FALSE
........LOWER INPUT      [86 ] = FALSE
........MIN VALUE        [87 ] = -100.00 %
........MAX VALUE        [88 ] = 100.00 %
........EXTERNAL RESET   [89 ] = FALSE
........RAISE/LOWER O/P  [45 ] = 0.00 %
h.......RAISE/LOWER INIT [678] = 0.00 %
```

BLOCK DIAGRAM

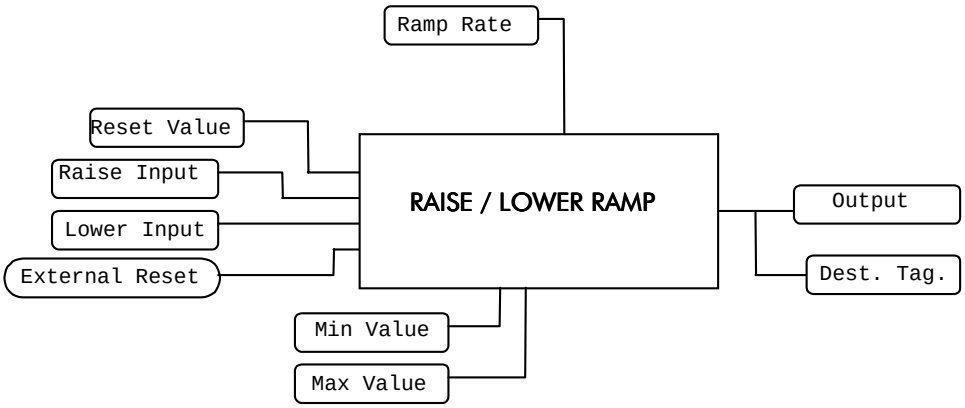

Figure 5.6 Raise Lower Ramp

PARAMETERS

RESET VALUE	This reset value is pre-loaded directly into the output when EXTERNAL RESET is TRUE or at power-up. It is clamped by MIN and MAX. VALUEs.
RAMP RATE	This is the rate of change of output value. The raise and lower rates are always equal.
RAISE INPUT	
LOWER INPUT	Command to raise / lower output. These are normally connected to digital inputs in order to be useful.
MAX VALUE	
MIN VALUE	Maximum / minimum ramp output clamp. This is a plain clamp, not a ramped "MIN SPEED" setting.
EXTERNAL RESET	If EXTERNAL RESET is TRUE the output of the raise / lower block is set to the reset value. If an auto-reset feature is required then the System Reset TAG can be linked to the external reset.
RAISE/LOWER O/P	Diagnostic.
RAISE/LOWER INIT	(Engineering only) Power up output value of the raise / lower function block. To make the output of this block persistent then the output must be added to the list of persistent data in the SYSTEM:: PERSISTENT DATA.

INVERSE TIME

MMI ENTRIES

```
h.....INVERSE TIME
h.......AIMING POINT     [116] = 105.00 %
h.......DELAY            [117] = 60.0 SECS
h.......DOWN RATE        [118] = 10.0 SECS
h.......UP RATE          [148] = 120.0 SECS
........INVERSE TIME O/P [15 ] = 11.96 %
```

The inverse time function carries out two separate functions, a) Protects the stack against over heating by winding back the current after a defined period. b) clamps the torque demand in the field weakening region to ensure that it does not exceed the motor current limit.

At speeds greater than base speed the output of the inverse time will normally be less that 150 % due to the Magnetisation current element of Motor Current.

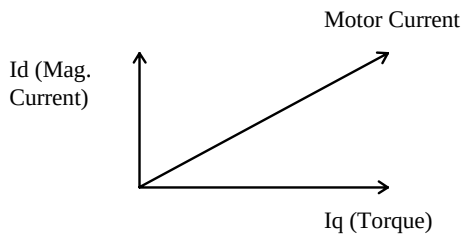

NOTE: The inverse time function is the only limit that works in motor current, all others work in Torque limit. Torque limit takes no account the Magnetisation. Current.

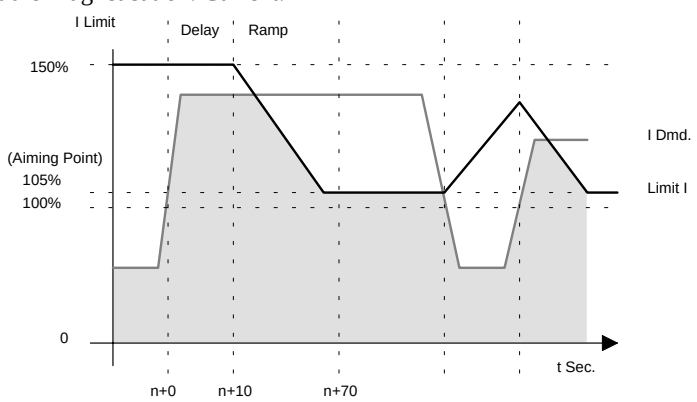

Figure 5.7 Inverse Time

PARAMETERS

AIMING POINT	The level to which the inverse time function will wind back the current limit.
DELAY	The delay before the inverse time starts to operate.
DOWN RATE	The Rate at which the current is wound back
UP RATE	The rate at which the inverse time function recovers.

STOP RATES

MMI ENTRIES

```
......STOP RATES
........RUN STOP TIME [120] = 10.0 SECS
........RUN STOP LIMIT [121] = 60.0 SECS
........FAST STOP TIME [123] = 1.0 SECS
........FAST STOP LIMIT [124] = 60.0 SECS
........USE SYSTEM RAMP [125] = TRUE
f.......PRE-START DELAY [122] = 0.500 SECS
f.......READY DELAY [352] = 0.000 SECS
........CONTACTOR DELAY [112] = 0.5 SECS
........PILOT 590 MODE [777] = FALSE
........STOP ZERO SPEED [126] = 1.00 %
........PROG STOP I-LIM [622] = 150.00 %
........COAST STOP [26] = FALSE
........PROGRAM STOP [22] = FALSE
```

STOP HIERARCHY

Coast Stop
- Disables the drive and opens the output contactor via the pilot output.

Enable
- Suspends And Resets The Control Loops

Fast Stop
- Independent Ramp Time
- Timer
- Independent Zero Speed.

Normal Run / Stop
- Independent Ramp Time

PARAMETERS

RUN STOP TIME	Sets deceleration rate for the Stop ramp operation.
RUN STOP LIMIT	Sets the maximum time the drive will allow the Stop function to operate, if the drive has not reached zero speed in this period the drive will coast to a stop. If USE SYSTEM RAMP = TRUE then timer is started once the o/p of the system ramp of local ramp reaches zero.
FAST STOP TIME	Sets deceleration rate for the Fast Stop ramp operation.
FAST STOP LIMIT	Sets the maximum time the drive will allow the Fast Stop function to operate, if the drive has not reached zero speed in this period the drive will coast to a stop.
USE SYSTEM RAMP	Forces the drive to quench the input to the system ramp / local ramp and wait for the ramp output to reach zero before doing a normal stop. NOTE: Not applicable for Fast Stop. Note the System Ramp is by-passed if any of the following conditions are true:- Ramp Hold, Ramp External Reset, Ramp Quench or Speed Loop Test Mode.
PRE-START DELAY	Delays the enabling of the drive to allow time for an o/p contactor to close before current is passed. This delay is only added if the pilot output is open.
READY DELAY	See below for a more detailed description.
CONTACTOR DELAY	Sets the time during which the drive will maintain zero speed after the motor has stopped. NOTE: This does not effect the operation of the pilot output. The term contactor delay comes from the 590 DC drive.
PILOT 590 MODE	If TRUE the contactor / pilot output mimics the behaviour of the 590 DC Drive. The contactor is only closed while the drive is in RUN mode. In this mode the drive always inserts a delay of " *PRE-START DELAY* " before enabling the stack, this is to allow time for the contactor to close. A better way of doing this is to use an auxiliary contact into the Enable Input. If FALSE the contactor is closed on power-up and only opened if the drive trips.
STOP ZERO SPEED	Sets the threshold at which the contactor delay timer is started.
PROG STOP I-LIM	Sets the current limit used during a program stop. This will not override the inverse time output.
COAST STOP	Diagnostic
PROGRAM STOP	Diagnostic

NOTES: USE SYSTEM RAMP.

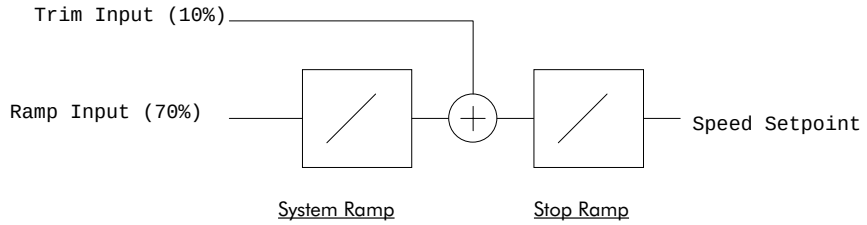

Figure 5.8 Example

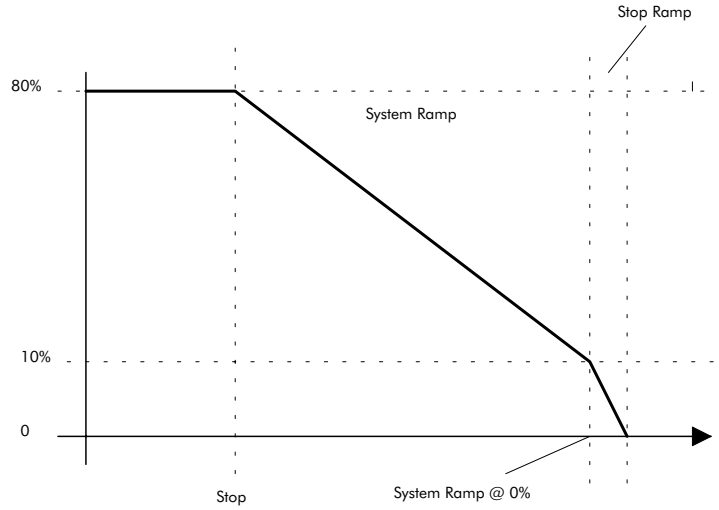

Figure 5.9 Use System Ramp

NOTES: READY OUTPUT

The Ready output will go high “ready delay” seconds after the drive has been stated and is ready to make current.

The ready output remains high until the drive is stopped, then if “ready delay” > 0 then it goes low as soon as the drive reaches “stop zero speed” else as the drive is quenched.

In case of a fault / trip the ready line will also go low.

MODE 1 Ready Delay = 0

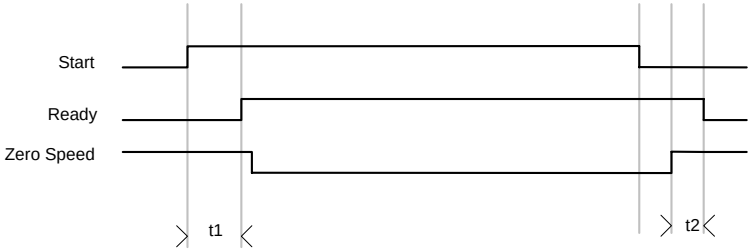

t1	Pre-Start Checks
t2	Contactor Delay

Figure 5.10 Ready Timing Ready delay = 0

Setting Ready delay to 0 (default) causes ready to be set once the drive has be initialised and is healthy. Ready is held high until the drive is quenched by /Start, Program stop, Coast Stop or the drive becoming unhealthy.

NOTE:

- Ready is independent of Enable.
- In this mode, Start and Jog are synonymous.

MODE 2 Ready Delay ≠ 0

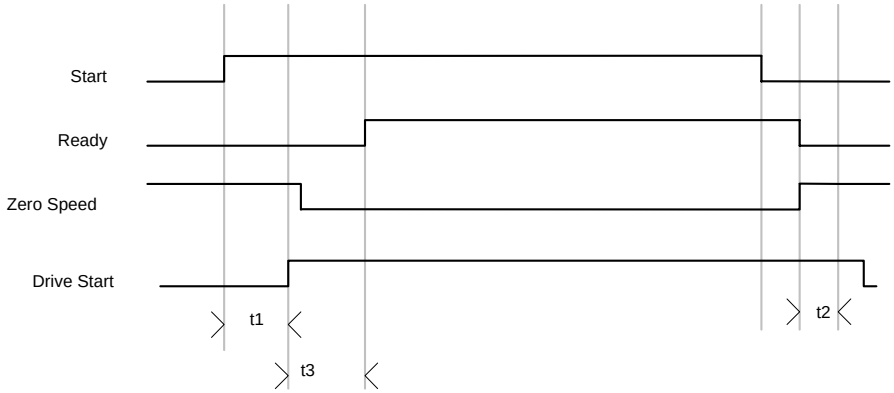

t1	Pre-Start Checks
t2	Contactor Delay
t3	Ready Delay

Figure 5.11 Ready Timing Ready delay ≠ 0

Setting Ready delay to none zero causes ready to be set a fixed delay after the drive becoming ready. Ready is held high until the drive is stooped by /Start, Program stop, Coast Stop or the drive becoming unhealthy. In the case of a /Start command Ready will be low during the contactor delay period.

More Notes:

- Ready is independent of Enable.
- The delay is only inserted for Start and not for JOG

ALARMS

MMI ENTRIES

```
.....ALARMS / SEQ
........EXTERNAL TRIP [144] = FALSE
........MOTR.TMP.INHIBIT [146] = FALSE
f.......ACK ALARM [166] = TRUE
........STALL INHIBIT [143] = FALSE
........STALL TORQUE [136] = 95.00 %
........STALL SPEED [138] = 4.00 %
........STALL DELAY [137] = 10.00
........STALL TRIP [20] = OK
........OVER SPD INHIBIT [145] = FALSE
........OVER SPEED LEVEL [139] = 120.00 %
h.......UNDER V LEVEL [685] = 440 VOLTS
h...../UNDER VOLTS [686] = TRUE
........5703 RCV.INHIBIT [142] = FALSE
f.......SPD.FBK.DELAY [687] = 10.000 SECS
f.......SPD.FBK.THRESHD [688] = 10.00 %
........SPD.FBK.INHIBIT [689] = FALSE
h.......HEALTH INHIBIT [219] = 0x0000
f.......OPERATING MODE [25] = STOPPED
f.......DRIVE START [23] = FALSE
f.......DRIVE ENABLE [24] = FALSE
f.......READY [559] = FALSE
f.......RUN [28] = FALSE
f.......HEALTH STORE [203] = 0x0000
f.......HEALTH WORD [217] = 0x0000
f.......FIRST ALARM [218] = 0x0000
f.......HEALTHY [27] = TRUE
f.......HEALTH OUTPUT [12] = TRUE
```

ALARMS

EXTERNAL TRIP	If set generates a user alarm / trip.
MOTOR.TMP.INHIBIT	Disables operation of the Motor Thermistor alarm
ACK ALARM	Must be TRUE to allow the automatic acknowledging of alarms by a start command being reapplied. By connecting this to a normally open digital i/p, the drive will wait for a LOW-HIGH signal before restarting after a drive trip. NOTE: 620L configurations from release 2.x set the value of ACK ALARM to FALSE, requiring a low → high → low transition to acknowledge an active alarm.

STALL

STALL INHIBIT	Disables the stall alarm.
STALL TORQUE	The threshold at which torque must reach to be deemed as stalled.
STALL SPEED	The threshold for speed feedback below, which the stall condition is looked for. Note the speed demand must also be above this threshold.
STALL DELAY	Time stall has to be present before if generates an alarm.

Stall Algorithm

IF ((|**SPEED_DEMAND**| > **STALL_SPEED**) AND (|**SPEED_FEEDBACK**| < **STALL_SPEED**) AND |**TORQUE_DEMAND**| > **STALL_TORQUE**)) THEN Start Stall Timer

UNDER VOLTAGE

UNDER V LEVEL	(Engineering only) sets the level above which /.UNDER VOLTS is TRUE.
/UNDER VOLTS	(Engineering only) Under voltage signal, used to trigger saving of persistent data.

OVER SPEED

OVER SPD INHIBIT	Disables the overspeed alarm.
OVER SPEED LEVEL	Threshold above which an overspeed alarm is generated.

5703 RECEIVE ERROR

5703 RCV.INHIBI	Disables the 5703 alarm. This only applies for 5703 slaves, if enabled the drive will trip if it stops receiving valid 5703 messages from its master.

SPEED FEEDBACK

SPD.FBK.DELAY	Delay before the speed feedback alarm is triggered.
SPD.FBK.THRESHD	The value of speed error below which the alarm is automatically inhibited.
SPD.FBK.INHIBI	Disables the speed feedback trip. This is necessary if the drive is to operate in a mode where there is a speed error, for example a drive operating in torque control.

DIAGNOSTICS

OPERATING MODE	Diagnostic.
DRIVE START	Diagnostic.
DRIVE ENABLE	Diagnostic.
READY	Diagnostic.
RUN	Diagnostic.
HEALTH STORE	Diagnostic.
HEALTH WORD	Diagnostic.
FIRST ALARM	Diagnostic.
HEALTHY	Diagnostic.
HEALTH OUTPUT	Diagnostic.

CALIBRATION

MMI ENTRIES

```
........ENCODER LINES [131] = 2048
........ENCODER SUPPLY [774] = 50 %
........MAX SPEED RPM [130] = 1500 RPM
........BASE FREQUENCY [448] = 50.0 Hz
........MOTOR VOLTS [486] = 415 VOLTS
........MOTOR RATING RMS [134] = 1.0 AMPS
........NO.OF POLES [399] = 4
........NAMEPLATE RPM [135] = 1440 RPM
```

PARAMETERS

ENCODER LINES	The exact number of lines on the encoder. Failure to enter this value correctly will cause loss of torque and incorrect results from the Autotune.
ENCODER SUPPLY	Sets the encode supply voltage, the actual value should read with a Multi-meter. The voltage range is approximately 10 to 20volts with 50% being 10v.
MAX SPEED RPM	Motor top speed setting, equates to 100% setpoint. This may be adjusted to suit your process.
BASE FREQUENCY	Base speed of the motor usually 50 or 60Hz.
MOTOR VOLTS	Actual motor volts from motor nameplate, or motor data sheet.
MOTOR RATING RMS	The motor rating current in amps from the motor nameplate. For the best performance, this value should be at least 50% of the drive rating. If you are derating your motor for “Inverter” use then you should use the non-derated value of current.
NO OF POLES	Number of poles in the motor; must be divisible by two, e.g. 2,4,6,8.
NAMEPLATE RPM	Motor speed, taking slip into account. This value will be provided by the motor manufacturer, usually on the motor nameplate.

TORQUE LOOP

BACKGROUND

The current in an induction motor may be split into a torque producing component (iq) and a magnetising component (id). The vector drive will attempt to control both these components. The magnetising current controls the flux in the motor. When the motor turns, this flux produces a back emf, which is proportional to flux and rotor speed. The voltage at the motor terminals will be approximately equal to this back emf, plus a small stator voltage drop.

At light load, i.e. when the motor is rotating with bare shaft only, there is no torque component and the current flowing is entirely magnetising current. If the motor flux is correct, then the terminal volts at base speed should be approximately equal to the rated motor voltage. This enables the magnetising current to be set up. In practice, the terminal volts should be about 95% of rated volts, to allow for the extra stator voltage drop under load.

At light load, the applied magnetising current will rotate synchronously with the motor shaft. As the load increases, the vector controller will cause the applied current to rotate slowly with respect to the motor shaft. This is called 'slip'. This slip frequency will increase linearly as load is applied to the motor, and may be typically of the order of 1Hz at rated load. That is, if the motor shaft is rotating at 50Hz, then the motor current will be rotating at 51Hz. This slip frequency is necessary to split the motor current into a magnetising component and a torque component.

The slip frequency is given by the value of the rotor time constant. It is important to get it correct in order to ensure the correct split of the motor current into the torque component and the magnetising component. If the slip frequency is zero, then 100% of the motor current goes to magnetise the rotor, and none produces torque. As the slip frequency is increased, the proportion of magnetising current decreases. Slip frequency is inversely proportional to rotor time constant.

The aim is to maintain constant magnetising current for all load conditions by linearly increasing the slip frequency as load increases. If the slip frequency is increased too much as load is applied, the magnetising current will be too small, and the terminal voltage will drop. If the slip frequency is increased by too little, the magnetising current will be too large, and the terminal voltage will increase. This enables the rotor time constant to be set up. After setting up the magnetising current as above, with no load on the motor, the motor is then fully loaded, and the value of rotor time constant is adjusted to give the correct slip frequency to give the correct motor terminal volts. Alternatively it is possible to calculate the value of rotor time constant which will give the slip frequency written on the motor nameplate. This is less accurate but it doesn't require a load rig.

Increasing rotor time constant	Decreases slip frequency	Increases motor terminal volts
Decreasing rotor time constant	Increases slip frequency	Decreases motor terminal volts

MAG. CURRENT CALCULATION

If an Autotune can not be performed then an approximation of Magnetising current can be found from either the motor “no load current”. It may be calculated from ((No Load Current/Motor Rating RMS) * 100%) or using the motors power factor cos.φ and the table below.

Magnetisation Current = Full load Current $\theta)\sqrt{(1- \cos. \theta^2)}$

Cos θ	MAG CURRENT %
.60	80%
.65	76%
.70	71%
.75	66%
.80	60%
.85	53%
.90	44%
.92	39%

Figure 5.12

MMI ENTRIES

```
......TORQUE LOOP
........MAG CURRENT % [453] = 30.00 %
........ROTOR TIME CONST [458] = 100.0 mSECS
........TORQ.DMD.ISOLATE [596] = FALSE
........AUX TORQUE DMD [599] = 0.00 %
........ADVANCED
..........1 / GAIN [149] = 70
f.........ROTOR TEMP [769] = 100.00 %
f.........Tr COMP (COLD) [770] = 80.00 %
f.........Tr COMP [784] = 100.00 %
........TORQUE LIMITS
..........POS TORQUE LIMIT [157] = 150.00 %
```

```
..........NEG TORQUE LIMIT [158] = -150.00 %
..........MAIN TORQUE LIM. [159] = 100.00 %
..........SYMMETRIC TQ.LIM. [153] = TRUE
..........ACTUAL POS I LIM [13] = 31.44 %
..........ACTUAL NEG I LIM [14] = -31.44 %
..........CURRENT LIMIT [585] = 150.00 %
..........AT CURRENT LIMIT [16] = FALSE
........CURRENT FEEDBACK [78] = 0.00 %
f.......TERMINAL VOLTS [480] = 0 VOLTS
f.......DC LINK VOLTS [613] = 594 VOLTS
h.......DC VOLTS UNFLT [684] = 594 VOLTS
........TORQUE DEMAND [9] = 0.00 %
........TORQUE FEEDBACK [10] = 0.00 %
```

PARAMETERS

MAG CURRENT % [453]	set by Autotune
ROTOR TIME CONST [458]	set by Autotune

DIRECT TORQUE CONTROL

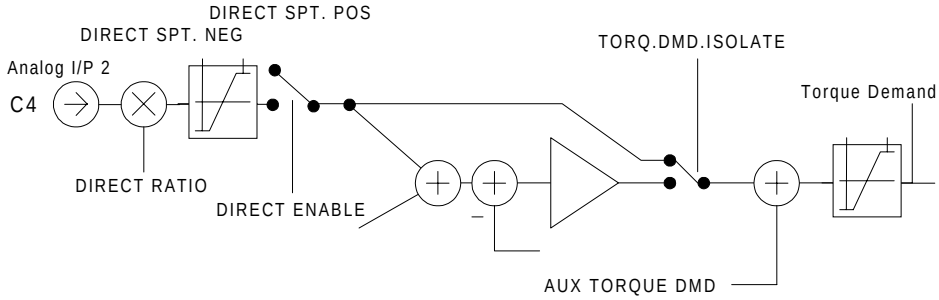

Figure 5.13 Speed Loop

TORQ.DMD.ISOLATE	Bypasses the speed loop. NOTE: This mode is over-ridden while the drive is stopping, and during autotune.
AUX TORQUE DMD	Additional torque demand.

ADVANCED

1 / GAIN [149]	Current loop gain is not a critical parameter and it should not normally be necessary to change it from the factory default value provided the motor is a standard type whose rating is reasonably close to the rating of the drive. See Appendix A, "Current Loop Gain".
ROTOR TEMP	Rotor temperature input, this value is used to calculate a rotor time constant compensation value. The value of rotor temperature must either be calculated externally of measured directly using an analogue input.
Tr COMP (COLD)	Sets the range of the rotor time constant compensation value, from cold to hot. Cold in this context is ROTOR TEMP = 0%
Tr COMP [784]	Diagnostic.

TORQUE LIMITS

These limits the torque to the motor, not the current. The Current to the motor is made up of two component a Torque producing component, Iq and a "Field" producing component. The vector sum of these to is motor current.

200 % TORQUE LIMITS

Although the limits have the range ± 200% this is only of use if the stack is capable of providing the extra current required. Stacks are rated for 150% current as standard, the current is clamped to 150% of stack RMS current by the Ixt function block.

POS TORQUE LIMIT	Positive Torque Limit see over page.
NEG TORQUE LIMIT	Negative Torque Limit see over page.
MAIN TORQUE LIMIT	Main Torque Limit see over page.
SYMMETRIC TQ.LIMIT	Selects whether the negative limit is used or not.

Symmetric Limits

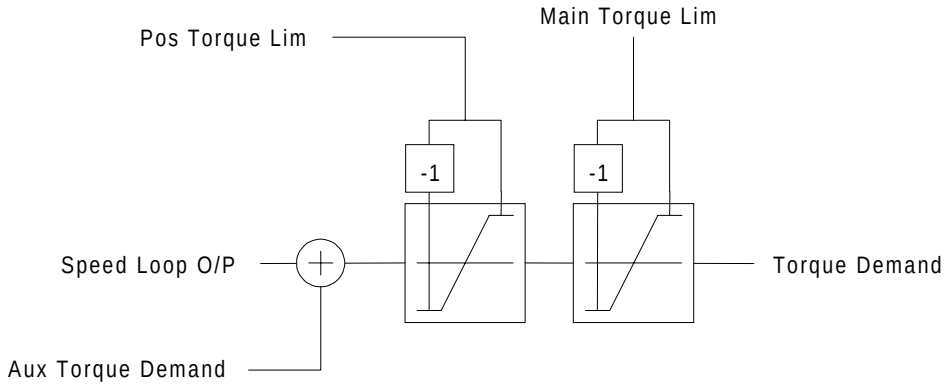

Figure 5.14 Symmetric Limits

Asymmetric Limits

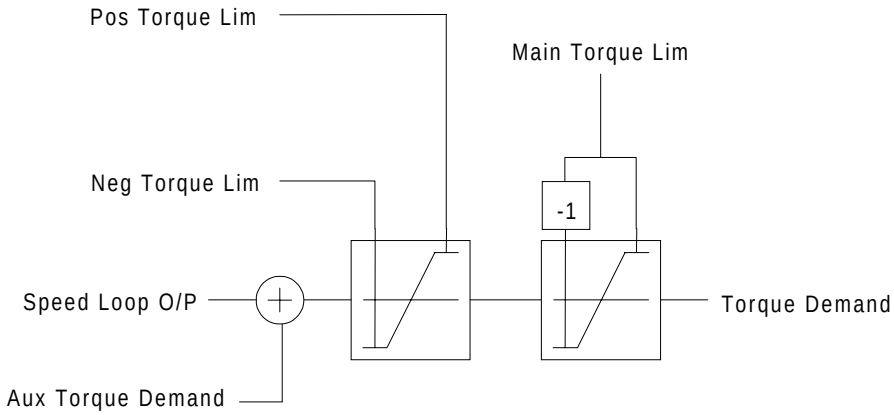

Figure 5.15 Asymmetric Limits

Algorithm

```
/* Clamp POS Limit  > NEG Limit */
if (NEG > POS)
      if (POS >= 0)
      /* POS clamp is positive so clamp NEG clamp to POS */
      NEG := POS;
      else if (NEG <= 0)
      /* NEG clamp is negative so clamp POS clamp to NEG */
      POS := NEG;
      else
      /* Clamps have crossed over so set to zero */
      NEG := POS = 0;
      endif
endif
```

CURRENT LIMIT	Current Limit in “Motor Amps” taking into account both the magnetisation and torque components iq and id.
CURRENT FEEDBACK	This is normally a percentage of the rated motor current. However, if the rated motor current is greater than the rated drive current, it is displayed as a percentage of drive current.
TERMINAL VOLTS	Diagnostic
DC LINK VOLTS	Diagnostic
DC VOLTS UNFLT	An unfiltered version of DC Link volts.
TORQUE DEMAND	Diagnostic
TORQUE FEEDBACK	Diagnostic

SPEED LOOP

MMI ENTRIES

```
......SPEED LOOP
........SPD. PROP. GAIN [161] = 10.00
........SPD. INT. TIME [162] = 100 mSECS
f.......INT. DEFEAT [163] = FALSE
........ENCODER SIGN [164] = NEG
f.......ADVANCED
f.........SPEED FBK FILTER [673] = 0.500
f.........SPEED DMD FILTER [662] = 0.750
f.........ADAPTIVE THRESH [674] = 0.50 %
f.........ADAPTIVE P-GAIN [675] = 10.00
f.........PWR LOSS CNTRL
f..........ENABLE [639] = FALSE
f..........TRIP THRESHOLD [640] = 0 VOLTS
f..........CONTROL BAND [657] = 20 VOLTS
f..........DECEL RATE [641] = 2.50 %
f..........ACCEL RATE [644] = 0.50 %
f..........TIME LIMIT [643] = 30.000 SECS
f..........PWR LOSS ACTIVE [766] = FALSE
........SPEED SETPOINTS
..........DIRECT SPT1 [171] = 0.00 %
..........DIRECT RATIO [172] = 0.1000
..........DIRECT SPT. MAX [173] = 100.00 %
..........DIRECT SPT. MIN [174] = -100.00 %
..........DIRECT ENABLE [175] = FALSE
..........MAIN SPD.SPT. [176] = 0.00 % <- [346]
..........MAX SPEED [177] = 100.00 %
..........MIN SPEED [178] = -100.00 %
h.........SEQ RUN INPUT [49] = 0.00 %
h.........SEQ OUTPUT [50] = 0.00 %
f.......ZERO SPEED
..........ZERO SPD HYST [132] = 0.10 %
..........ZERO SPEED LEVEL [252] = 0.50 %
..........AT ZERO SPEED [17] = TRUE
..........AT ZERO SETPOINT [18] = TRUE
..........AT STANDSTILL [19] = TRUE
f.......TEST MODE
f.........ENABLE [647] = FALSE
f.........SPEED SETPOINT 1 [648] = 5.00 %
f.........SPEED SETPOINT 2 [649] = 10.00 %
f.........PERIOD [650] = 1000 mSECS
........TOTAL SPD.DMD. [6] = 0.00 %
h.......SPEED FB UNFIL [7] = 0.00 %
........SPEED FEEDBACK [11] = 0.00 %
........SPEED ERROR [8] = 0.00 %
........ENCODER [51] = 0 RPM
........SPEED SETPOINT [48] = 0.00 %
```

SPEED LOOP TUNING

SPD PROP GAIN	Speed loop PI proportional gain adjustment. A gain value of 1.00 is unity.
SPD INT.TIME.	Speed loop PI integral gain adjustment.
INT. DEFEAT	Turn speed loop in to a P only controller.

The PI is designed as a saturating loop, i.e. it is normal for the output to reach saturation. In order to prevent integral wind up during saturation the integral term is held constant while the output is saturated.

Saturation is deemed to be when the output is ≥ to the prevailing torque limit.

ENCODER SIGN	If the Encoder sign is incorrect the motor will not operate smoothly. The sign of the encoder can be changed either in hardware by swapping the A and B channels or by toggling this parameter. A third way of matching encoder sign to motor direction is to swap any two motor output phases.

SPEED FEEDBACK

The 620 requires an encoder feedback device tightly coupled to the motor shaft to achieve its high level of performance. This is because accurate real time measurement of shaft position is used in the vector calculations. The number of encoder lines is also important to achieve high performance, the higher the number of lines the greater the speed loop gain. Also as a result of more lines the high frequency ripple in the torque is also reduced, reducing audible noise.

The number of lines on the encoder is set in the **`SETUP PARAMETERS::CALIBRATION`** menu. An incorrect number of lines will prevent the drive from operating smoothly and in some circumstances may cause the drive to operate in an uncontrolled manner.

ADVANCED

SPEED FBK FILTER	A simple filter function that is applied to speed feedback to reduce ripple caused by low line count encoders. A value of 0 disables the filter action and 1.00 is the maximum value. A typical value would be between 0.5 and 0.75, previous releases had a default of 0.5. NOTE: INCREASING THE FILTER VALUE MAY MAKE THE SPEED LOOP UNSTABLE.
SPEED DMD FILTER	A simple filter function applied to speed demand to reduce ripple. A value of 0 disables the filter action and 1.00 is the maximum value.
ADAPTIVE THRESHOLD	Level below which the ADAPTIVE P-GAIN is selected
ADAPTIVE P-GAIN	P-Gain used when speed error is less than the adaptive threshold, this may be used to lessen motor noise in the steady state.

NOTES:

The filter time constant τ in milli-seconds can be calculated from the following equation .

$$\tau = \frac{1.1}{Log_e\left(\frac{1}{\alpha}\right)}$$

Where α is the value of SPD FBK FILTER or SPD DMD FILTER. A value of 0.5 equates to a filter time of 1,6mS, 0.8 to 4.9mS and 0.9 to 10.4mS.

POWER LOSS CONTROL

NOTES:

The power loss control on the 620 works if enabled, by continually comparing the actual value of DC-Link volts to a threshold. If the actual value of the DC-Link falls below this `TRIP THRESHOLD` then the drive attempts to pump-up the DC-Link by decelerating the load, thus recovering its stored kinetic energy. Once the drive reaches zero speed or a time out occurs then a POWER LOSS alarm is triggered. If the power supply is resumed before the load has reached zero speed then the load is ramped back up to the actual demanded speed. If there is not enough kinetic energy in the load or the deceleration rate is set too long then an under voltage trip will be trigged. Over Voltages may also occur if the deceleration rate is too fast and there is insufficient dynamic braking fitted.

SYSTEM INTEGRATION

In a common DC bus system, only the Master drive should have the power loss logic enabled. Otherwise each drive will be following its own ramp and web speed will no longer be maintained.

With the DC link connected together, once the master starts to regenerate and the slaves will follow and the link voltage will be maintained by the sum of all the drives.

The slaves must follow the master as quickly as possible to reduce the drain on the link, the 5703 setpoint repeater is a good way of achieving this.

Some DC braking should be provided to prevent over-voltage trips.

MMI

```
f.........PWR LOSS CNTRL
f...........ENABLE [639] = FALSE
f...........TRIP THRESHOLD [640] = 0 VOLTS
f...........CONTROL BAND [657] = 20 VOLTS
f...........DECEL RATE [641] = 2.50 %
f...........ACCEL RATE [644] = 0.50 %
f...........TIME LIMIT [643] = 30.000 SECS
f...........PWR LOSS ACTIVE [766] = FALSE
```

ENABLE	Enables the power loss control option, without this TAG set the power loss software is inactive.
TRIP THRESHOLD	The TRIP THRESHOLD sets the DC Link level in volts at which the power loss operation is triggered.
CONTROL BAND	The CONTROL BAND sets the level above the TRIP THRESHOLD at which the power loss operation is paused. If the DC link level remains above this level for 500 cycles (About 500ms) the power loss recovery sequence is begun and the setpoint ramps back up to the demanded setpoint.
DECEL RATE	The DECEL RATE sets the rate at which the drive decelerates the load to keep the DC-Link pumped up. This should be set at the drives' worst operating point, highest load / lowest inertia.
ACCEL RATE	The ACCEL RATE sets the rate at which the drive accelerates back up to the actual setpoint. This should be set to about a 1/10th of the DECEL RATE..
TIME LIMIT	The TIME LIMIT sets the maximum amount of time that the drives is allowed to be in the power loss mode. Once this time expires the drive will trip on POWER LOSS TRIP alarm.
PWR LOSS ACTIVE	The PWR LOSS ACTIVE is a diagnostic that indicates that the power loss is active.

SPEED SETPOINTS

The Speed setpoint can come from one of two sources (Local or Remote). In Local mode the setpoint is derived directly from the Op-Station value and the reset of the drives block diagram is running but not used in the calculation of the setpoint.

The Speed Demand has a 10% over-range, although input 0 only has the range ± 105.00%. This allows take up slack to operate over the whole speed range.

DIRECT SPT1	This setpoint processing is synchronous with the speed loop (every 1.1 ms) and can be used by an external trim loop (positioning systems etc.). When not in use this should be disabled.

DIRECT SPT. MAX	
DIRECT SPT. MIN	Limits the range of the scaled Direct input.
DIRECT ENABLE	Disables the processing of analogue input C4, this must be enabled to make use of this feature. The Direct setpoint is automatically disabled while the stop ramps are active and in Local mode.
MAIN SPD.SPT.	This is the main setpoint from the block diagram.
MAX SPEED	
MIN SPEED	These are intended to prevent the speed setpoint from going negative and not to create an offset. Offsets may be generated elsewhere, probably before the system ramp.

ZERO SPEED

ZERO SPD HYST	Hysterises level for zero speed detection.
ZERO SPEED LEVEL	Zero speed threshold.
AT ZERO SPEED	Diagnostic
AT ZERO SETPOINT	Diagnostic
AT STANDSTILL	Diagnostic

TEST MODE

ENABLE	If enabled the speed loop setpoint is defeated and the setpoint is obtained alternately from SPEED SETPOINT 1 and SPEED SETPOINT 2 at a rate determined by PERIOD. The test mode may be used to commission the PI for the speed loop.
SPEED SETPOINT 1	Speed test mode setpoint 1.
SPEED SETPOINT 2	Speed test mode setpoint 2.
PERIOD	Rate at which the test cycle operates at.

DIAGNOSTICS

TOTAL SPD.DMD.	Diagnostic
SPEED FEEDBACK	Diagnostic
SPEED ERROR	Diagnostic
ENCODER	Diagnostic
SPEED SETPOINT	Diagnostic

AUTOTUNE

MMI ENTRIES

```
......AUTOTUNE
........AUTOTUNE FLAG    [482] = FALSE
........MAG I AUTOTUNE   [483] = TRUE
........SET Tr < RTD SPD [484] = TRUE
........AUTOCAL MAX RPM  [629] = 30000 RPM
```

PARAMETERS

AUTOTUNE FLAG	If set the drive will begin its Autotune routine next time the drive is started.
MAG I AUTOTUNE	Enables the tuning of the Magnetisation Current phase of the Autotune, this requires the motor to rotate at base speed.
SET TR < RTD SPD	Enables the Rotor Time Constant calculation phase of Autotune.

AUTOCAL MAX RPM — The speed in rpm at which the last successful mag current autotune was carried out. If at any later date the user increases MAX SPEED RPM to more than 30% above this value, an error will be flagged. This parameter is set to a high default value so that the drive may run before any autocal has been carried out.

SETPOINT SUM 1- 3

MMI ENTRIES

```
......SETPOINT SUM 1
........RATIO 0          [189] = 1.0000
........RATIO 1          [190] = 1.0000
........SIGN 0           [191] = POS
........SIGN 1           [192] = POS
........DIVIDER 0        [193] = 1.0000
........DIVIDER 1        [194] = 1.0000
........LIMIT            [195] = 100.00 %
........INPUT 0          [196] = 0.00 %      Linked to [251]
........INPUT 1          [197] = 0.00 %      Linked to [259]
........INPUT 2          [198] = 0.00 %
........SPT SUM O/P 1    [46 ] = 0.00 %
......SETPOINT SUM 2
........RATIO 1          [365] = 1.0000
........RATIO 0          [364] = 1.0000
........SIGN 1           [367] = POS
........SIGN 0           [366] = POS
........DIVIDER 1        [369] = 1.0000
........DIVIDER 0        [368] = 1.0000
........LIMIT            [370] = 100.00 %
........INPUT 0          [371] = 0.00 %      Linked to [305]
........INPUT 1          [372] = 0.00 %      Linked to [308]
........INPUT 2          [373] = 0.00 %      Linked to [111]
........SPT SUM O/P 2    [385] = 0.00 %
......SETPOINT SUM 3
........RATIO 1          [376] = 1.0000
........RATIO 0          [375] = 1.0000
........SIGN 1           [378] = POS
........SIGN 0           [377] = POS
........DIVIDER 1        [380] = 1.0000
........DIVIDER 0        [379] = 1.0000
........LIMIT            [381] = 100.00 %
........INPUT 0          [382] = 0.00 %
........INPUT 1          [383] = 0.00 %
........INPUT 2          [384] = 0.00 %
........SPT SUM O/P 3    [386] = 0.00 %     *
```

BLOCK DIAGRAM

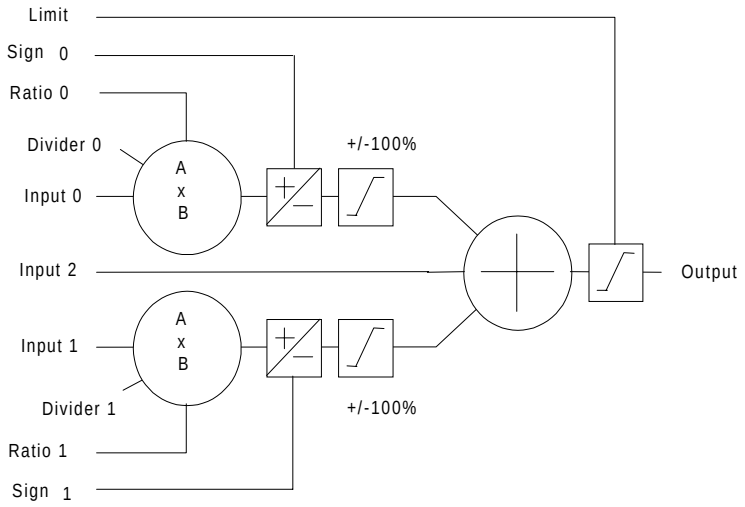

Figure 5.1 Setpoint Sum

ALGORITHM

$$Output = \left(\begin{array}{l} \left(\left(\dfrac{Input0_n \times Ratio0_n + Input0_{n-1} \% Ratio0_{n-1}}{Divider0} \right)_{-limit}^{limit} \times sign0_{-1}^{+1} \right) + \\ \left(\left(\dfrac{Input1_n \times Ratio1_n + Input1_{n-1} \% Ratio1_{n-1}}{100\%} \right)_{-limit}^{limit} \times sign1_{-1}^{+1} \right) + \\ Input2_n \end{array} \right)_{-limit}^{limit}$$

Equation 5.1 Setpoint Sum

RATIO 0/RATIO 1	Input scaling, a signed quantity ± 3.0000. Resolution is maintained by re-addition of all remainders, ensuring no information is lost.
SIGN 0/SIGN 1	Input 1 polarity. The sign is displayed as NEG or POS with zero being negative and one being positive.
DIVIDER 0/DIVIDER 1	Input scaling. Divisions by zero are trapped and the result is set to zero.
LIMIT	The Setpoint Sum programmable limit is symmetrical and has the range 0.00% to 300.00%. The limit is applied both to the intermediate results of the RATIO calculation and the total output.

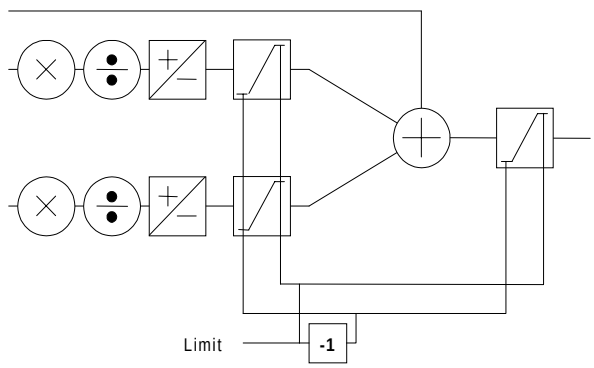

Figure 5.2 Setpoint Sum

INPUT 0/INPUT 1/INPUT 2	Input values.

REFERENCE ENCODER

MMI ENTRIES

```
f.....REF ENCODER
f.......PHASE
f.........RESET [600] = FALSE
f.........POS CALC ENABLE [337] = FALSE
f.........OFFSET MENU
f...........OFFSET [447] = 0
f...........OFFSET SCALE [609] = 1
f...........OFFSET TRIM [670] = 0
f.........TEST MODE
f...........ENABLE [652] = FALSE
f...........OFFSET 1 [653] = 500
f...........OFFSET 2 [654] = 1000
f...........PERIOD [655] = 1000 mSECS
f.........MAX POSITION ERR [342] = 100.00
f.........SATURATED [610] = FALSE
f.........OVERFLOW [611] = FALSE
f.........POSITION ERROR [338] = 0
f.......INPUT SCALING
f.........FBK.SCALE A [498] = 10000
f.........FBK.SCALE B [499] = 10000
f.........REF SCALE A [343] = 10000
f.........REF SCALE B [344] = 10000
h.........REF ENCODER CNT [359] = 0
h.........FBK ENCODER CNT [77] = 0
f.......LENGTH MENU
f.........LENGTH [765] = 0
f.........LENGTH SCALE [762] = 1
f.........LENGTH RATE [764] = 100.0
f.........SUBTRACT LENGTH [763] = FALSE
f.......INCH MENU
f.........INCH ADVANCE [604] = FALSE
f.........INCH RETARD [605] = FALSE
f.........INCH RATE [606] = 10.0
f.......CALC.REF.POSTION
f.........ENABLE [659] = FALSE
f.........INPUT [660] = 0.00 %
f.........OUTPUT [661] = 0
f.......REF.SPEED
f.........MAX SPEED RPM [353] = 1500 RPM
f.........ENCODER LINES [356] = 2048
f.........SCALE REF.SPEED [783] = TRUE
f.........REFSPEED [357] = 0.00 %
f.........FILTER TC [767] = 1.00 SECS
f.........FILTERED REF.SPD [768] = 0.00 %
```

BLOCK DIAGRAM

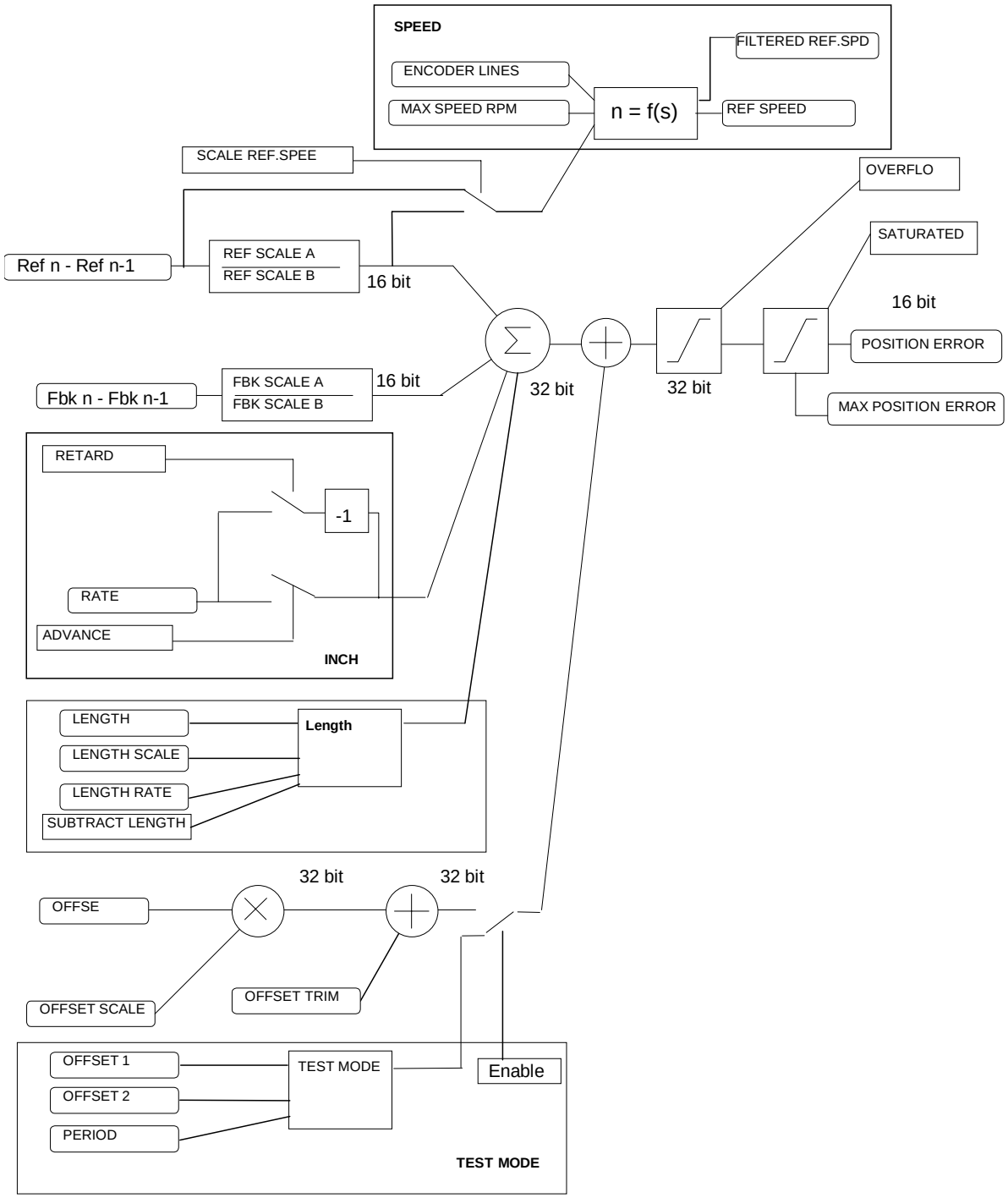

Figure 5.3 Phase Loop

PHASE

RESET	Sets and holds the position error at zero.
POS CALC ENABLE	Enable the computation of position error, disabling this also zeros the position error.
POSITION ERROR	Clamped Error output. This is the primary output of the phase loop function block. Position error is not usually used directly but instead connected to the PID input (first disconnecting the PID error calculator). The PID is then used either directly or more commonly as a speed correction.
SATURATED	Position Error output has been clamped. Error information is still valid until the OVERFLOW flag is set. It is not uncommon for this flag to be set during rapid accelerations where torque limit is reached. For optimal operation torque limit must never reached.
OVERFLOW	Position Error has overflowed and phase information has been lost. This is because the error has exceeded ± 1,000,000,000 counts, about 120,000 revolutions with a 2048 line encoder.
MAX POSITION ERR	Limit clamp for position error.

OFFSET MENU

OFFSET	Fixed offset scaled by OFFSET SCALE and added to position error, in encoder counts[1].
OFFSET SCALE	Scalar for offset to allow greater range.
OFFSET TRIM	Trim offset added into position error. Note: The total offset is a 32 bit quantity made up of the sum of offset and offset trim. Total Offset = (Offset * Offset Scale) + Offset Trim

TEST MODE

ENABLE	If enabled the phase loop offset is defeated and the offset is obtained alternately from OFFSET 1 and OFFSET 2 at a rate determined by PERIOD. The test mode may be used to commission the PID for the phase loop.
OFFSET 1	Phase test mode offset 1.
OFFSET 2	Phase test mode offset 2.
PERIOD	Rate at which the test cycle operates.

INPUT SCALING

REF SCALE A	Multiplicand for reference encoder.
REF SCALE B	Divisor for reference encoder. Example: Reference encoder has 1000 line and Master has 2048 lines then for 1:1 phase locking Ref. Scale A and B should be set to 2048 and 1000 respectively.
FBK SCALE A	Multiplicand for feedback encoder.
FBK SCALE B	Divisor for feedback encoder.

[1] Note: Encoder counts are equal to four times the number of lines on the encoder.

LENGTH

INTRODUCTION

The length function block adds the ability to subtract a length from position error on a signal to facilitate simple cut to length and indexing applications.

ALGORITHM:

The carriage is position locked to the product, the movement is limited to the track length by clamping the "position error" at the extreme ends of the track.

Once the cut point passes the carriage the error will be positive causing the carriage to accelerate up to line speed. A synchronisation signal is calculated from position error and used to fire the knife.

After the “cut” a number of counts equivalent to the length to be cut is subtracted from the position error. This has the effect of re-synchronising the knife drive with the next cut position. External logic must be used to ensure that the timing is appropriate and position the knife for the next cut

- Limit A is the Home End of travel limit.
- Between Limit A and B The position Error must be clamped to >= 0, this has the effect that the carriage is brought to rest at the home point.
- Limit B is the final End of travel stop

NOTES:

- The “cut” signal is edge triggered.
- The new position is applied through a linear ramp to reduce mechanical stresses to the machine.
- A new “cut” signal can be triggered at any point, two edges will cause 2 length to be subtracted.

LENGTH	Is the number of counts to add or subtract from the position error on a positive transition of SUBTRACT LENGTH.
LENGTH SCALE	A scale for LENGTH to allow for large indexes.
LENGTH RATE	The rate at which length is subtracted from position error.
SUBTRACT LENGTH	Each positive transition of SUBTRACT LENGTH causes Length to be subtracted from position error.

INCH

INCH ADVANCE	Boolean flag that when TRUE will trickle INCH RATE counts into the position Error each millisecond. This can be used to align the master motor to the reference motor.
INCH RETARD	As above in the other sense.
INCH RATE	The number of counts to be trickled into the Position error accumulator every millisecond.

CALC.REF.POSTION

ENABLE	If enabled the reference encoder position is synthesised from INPUT, it is assumed INPUT is demand velocity. The position error may then be used with the PID to provide a speed correction and added to demanded velocity. The primary purpose of this block is to improve the accuracy of open loop position moves.
INPUT	Velocity input for position calculator,
OUTPUT	Output diagnostic.

SPEED

Note: This is only applicable to the 620Comm and 620L.

Calculates reference speed from the reference encoder. Speed is normalised to 100% which equates to the maximum speed rpm parameter taking into account the number of lines on the reference encoder.

REFSPEED	Speed diagnostic calculated from Reference encoder.
MAX SPEED RPM	100% for reference encoder.
ENCODER LINES	Number of lines on the reference encoder used for the calculation of reference speed.
SCALED REF SPEED	If TRUE reference speed is scaled by REF SCALE A / REF SCALE B.

PID

The PID Block allows the drive to be used in applications where a trim is required from an external loop. The PID input can be load cell tension, dancer position or any other transducer feedback such as pressure, flow etc.

The most commonly encountered applications in web transfer and winding are:

Section Control with PID trim on speed demand. The PID input is either load cell tension or dancer position feedback.

FEATURES

1. Independent adjustment of gain and time constants.
2. Additional first-order filter (F).
3. Functions P, PI, PD, PID with/without F individually selected.
4. Ratio and divider for scaling each input.
5. Independent positive and negative limits.
6. Output scalar (Trim).

BLOCK DIAGRAM

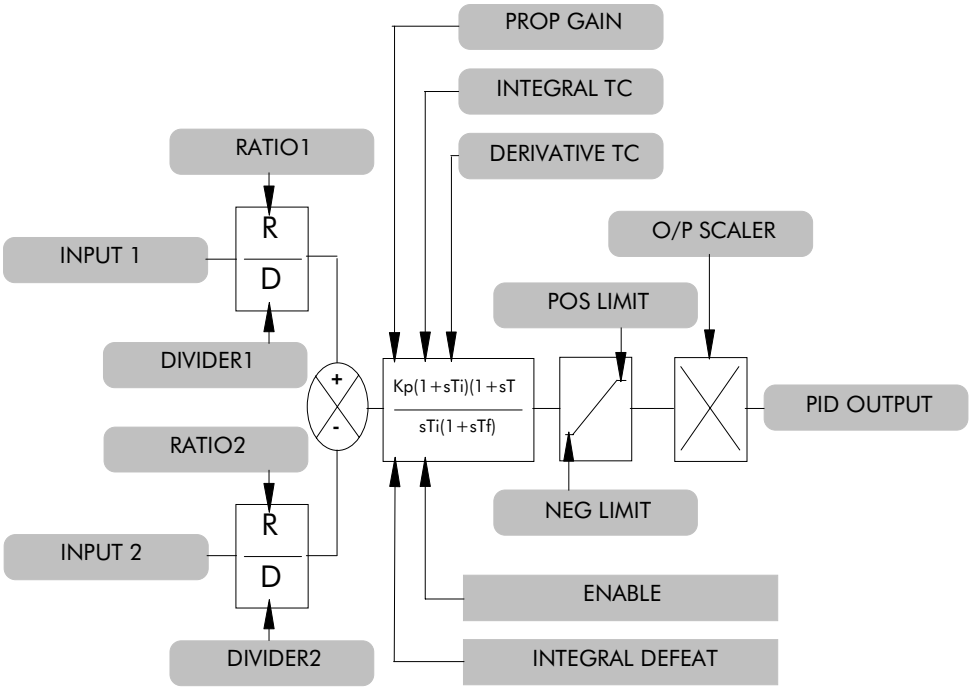

Figure 5.19 PID

MMI ENTRIES:

```
f.....PID
f.......INPUT            [545] = 0.00 %      Linked to [556]
f.......ENABLE           [534] = TRUE
f.......PROP.GAIN        [549] = 1.0
f.......INT.TIME CONST.  [539] = 5.00 SECS
f.......INT.DEFEAT       [538] = FALSE
f.......DERIVATIVE TC    [531] = 0.000 SECS
f.......FILTER TC        [535] = 0.100 SECS
f.......POSITIVE LIMIT   [547] = 100.00 %
f.......NEGATIVE LIMIT   [542] = -100.00 %
f.......O/P SCALER(TRIM) [543] = 1.0000
f.......ERROR CALC
f.........INPUT 1          [536] = 0.00 %
f.........INPUT 2          [537] = 0.00 %
f.........RATIO 1          [550] = 1.0000
f.........RATIO 2          [551] = 1.0000
f.........SIGN 1           [601] = POS
f.........SIGN 2           [602] = POS
f.........DIVIDER 1        [532] = 1.0000
f.........DIVIDER 2        [533] = 1.0000
f.........LIMIT            [553] = 100.00 %
f.........ERROR O/P        [500] = 0.00 %
f.......PROFILER
f.........MODE             [541] = 0
f.........MIN PROFILE GAIN [540] = 0.00 %
f.........PROFILED GAIN    [548] = 0.0
f.........PROFILE INPUT    [554] = 0.00 %
f.........PROFILE MININPUT [555] = 0.00 %
f.......OUTPUT           [546] = 0.00 %
f.......CLAMPED          [
44] = TRUE
```

INPUTS

INPUT 1	This can be either a position/tension feedback or a reference/offset.
RATIO 1	This multiplies INPUT 1 by a factor (RATIO 1).
DIVIDER 1	This divides INPUT 1 by a factor (DIVIDER 1).
INPUT 2	This can be either a position/tension feedback or a reference/offset. Range: ±300.00% Default: 0.00%
RATIO 2	This multiplies INPUT 2 by a factor (RATIO 2).
DIVIDER 2	This divides INPUT 2 by a factor (DIVIDER 2).
INT. DEFEAT	This is a digital input which resets the integral term when TRUE. The block transfer function then becomes P+D only.
ENABLE	This is a digital input which resets the (total) PID Output as well as the integral term when FALSE.

OUTPUTS (DIAGNOSTIC)

PID OUTPUT	This is the output of the PID block and is found in the Diagnostics menu.
PID ERROR	This is the difference of (INPUT 1 - INPUT 2) and is found in the Diagnostics menu.
PID CLAMPED	This is a logic output indicating whether the PID limits are active and is found in the Diagnostics menu.

PARAMETERS

PROP. GAIN (P)	This is a pure gain factor which shifts up or down the whole Bode PID transfer function leaving the time constants unaffected. A value of P=10.0

	means that, for an error of 5%, the proportional part (initial step) of the PID output will be: 10 * [1 + (Td/Ti)] * 5 % ,.e. approx. 50% for Td << Ti.
INT. TIME CONST. (Ti)	This is the integrator time constant.
DERIVATIVE (Td)	This is the differentiation time constant. When Td = 0 the transfer function of the block becomes a P+I.
FILTER TC (Tf)	In order to attenuate high-frequency noise a first order filter is added in conjunction with the differentiation. The ratio k of the Derivative Time Constant (Td) over the Filter Time Constant (Tf) (typically 4 or 5) determines the high-frequency lift of the transfer function. For Tf = 0 this filter is eliminated.
POSITIVE LIMIT	This is the upper limit of the PID algorithm.
NEGATIVE LIMIT	This is the lower limit of the PID algorithm.
O/P SCALAR (TRIM)	This is the ratio which the limited PID output is multiplied by in order to give the final PID Output. Normally this ratio would be between 0 and 1.

USER INTERFACE

CONFIGURING THE PID FUNCTION

INPUT CONNECTIONS

The two PID inputs (Input 1 & Input 2) by default are not connected to any signals and are only adjustable via the MMI up/down arrow keys.

If the application requires setpoint and/or feedback coming from other sources, then these signals should be configured to point to Inputs 1 and Input 2 respectively.

OUTPUT CONNECTION

The default destination for the PID Output is 0 which means that the block will not be operating unless its output is redirected to some other destination, typically a speed setpoint. This can be implemented by using the Block Diagram section of the CONFIGURE I/O menu.

INTERNAL LIMIT FUNCTIONS

PID ERROR

The PID Error is internally clamped to ±105.00%.

INTEGRAL TERM

The Integral Term is internally clamped to the prevailing values of "Positive Limit" and "Negative Limit" respectively as per PID Output.

It is also held while the PID Output is being clamped.

PRESET BLOCK

MMI ENTRIES:

```
......PRESET
........SELECT 1        [92 ] = FALSE          Linked to [285]
........SELECT 2        [93 ] = FALSE          Linked to [289]
........SELECT 3        [94 ] = FALSE          Linked to [525]
........INVERT O/P      [109] = FALSE
........INPUT 1         [95 ] = 0.00 %
........INPUT 2         [96 ] = 25.00 %
........INPUT 3         [97 ] = 50.00 %
........INPUT 4         [98 ] = 100.00 %
........INPUT 5         [99 ] = 0.00 %
........INPUT 6         [100] = -25.00 %
........INPUT 7         [101] = -50.00 %
........INPUT 8         [102] = -100.00 %
........PRESET O/P      [110] = 0.00 %
```

OVERVIEW

The Preset block allows the user to select 1 of 8 preset inputs, which in turn may be connected to other blocks of inputs.

BLOCK DIAGRAM

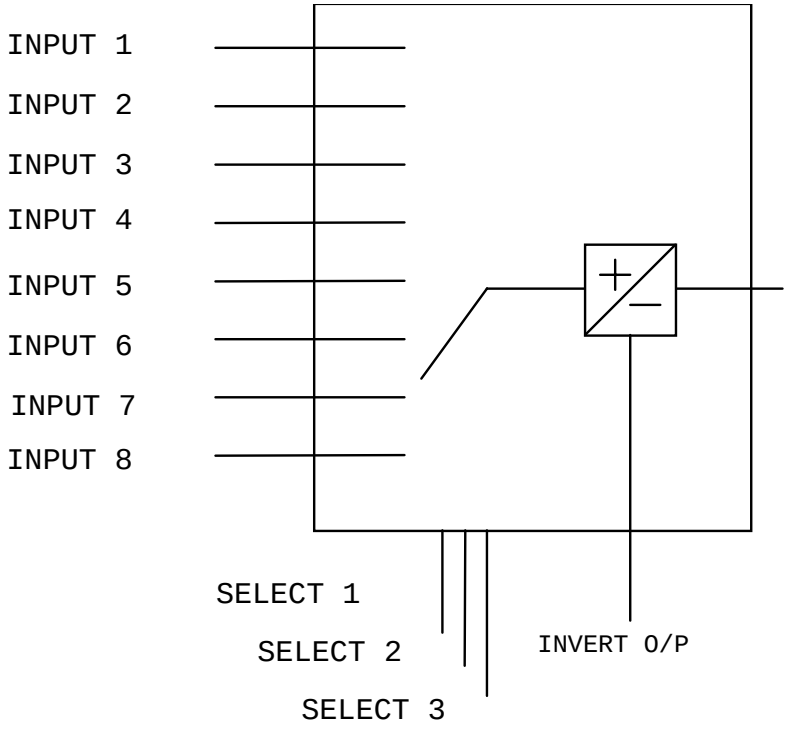

Figure 5.20 Preset Block

PRESETS

Input 1,2..8	Pre-set input variables.
Select 1,2,3	Select inputs 1
INVERT O/P	Changes the sign of the output, if TRUE the output is of the opposite sign to the selected input.

SELECTION TABLE

Three Boolean variables used to select between one of the 8 preset values.

Select 3	Select 2	Select 1	Input
FALSE	FALSE	FALSE	1
FALSE	FALSE	TRUE	2
FALSE	TRUE	FALSE	3
FALSE	TRUE	TRUE	4
TRUE	FALSE	FALSE	5
TRUE	FALSE	TRUE	6
TRUE	TRUE	FALSE	7
TRUE	TRUE	TRUE	8

Table 5.1 Preset input logic

S-RAMP

MMI ENTRIES:

```
f.....S-RAMP
f.......INPUT            [597] = 0.00 %
f.......SYMMETRIC        [667] = TRUE
f.......ACCELERATION     [106] = 10.00
f.......DECELERATION     [666] = 10.00
f.......JERK 1           [107] = 10.00
f.......JERK 2           [663] = 10.00
f.......JERK 3           [664] = 10.00
f.......JERK 4           [665] = 10.00
f.......AUTO RESET       [669] = TRUE
f.......EXTERNAL RESET   [104] = FALSE
f.......RESET VALUE      [105] = 0.00 %     *
f.......QUENCH           [108] = FALSE           *
f.......AT SPEED         [316] = FALSE
f.......AT SPEED LEVEL   [612] = 1.00 %
h.......ACCEL O/P        [253] = 0.00
h.......OVERSHOOT THRESH [254] = 5.00 %
h.......ERROR THRESHOLD  [668] = 0.50 %
f.......OUTPUT           [598] = 0.00 %
```

INPUT	Input value.
RESET	Boolean input, forces output to reset value
RESET VALUE	Output value during while rest is TRUE also used as initial value on start up.
SYMMETRIC	If TRUE enables Deceleration, Jerk 2, Jerk 3 and Jerk 4 parameters. If FALSE actual deceleration = acceleration, Jerk 2 = Jerk 3 = Jerk 4 = Jerk.
ACCELERATION	Acceleration rate, in units of percent per second^2. i.e. 75.00 % means that the maximum acceleration will be 75.00% per second^2 if the full speed of the machine is 1.25ms then the acceleration will be 1.25 * 75.0% = 0.9375ms^2 .
DECELERATION	Deceleration rate, only active if SYMMETRIC = TRUE.
JERK	Rate of change of acceleration, in units of percent per second^3. For example: 75.00 % means that the maximum acceleration will be 50.00% per second^3 if the full speed of the machine is 1.25ms then the acceleration will be 1.25 * 50.0% = 0.625ms3. If SYMMETRIC = TRUE then this value will be used for each of the four segments of the profile.

	If SYMMETRIC = TRUE then this value will be used only for the first acceleration segment.
JERK 2	Rate of change of acceleration in units of percent per second^3 for segment 2. Only applicable if SYMMETRIC = FALSE.
JERK 3	Rate of change of acceleration in units of percent per second^3 for segment 3. Only applicable if SYMMETRIC = FALSE.
JERK 4	Rate of change of acceleration in units of percent per second^3 for segment 4. Only applicable if SYMMETRIC = FALSE.
QUENCH	If TRUE forces the ramp input to zero.
AT SPEED	Diagnostic output indicating the abs (input - output) is less than AT SPEED LEVEL.
AT SPEED LEVEL	Threshold for AT SPEED diagnostic output.
ACCEL O/P	Reserved.
OVERSHOOT THRESH	Reserved.
ERROR THRESHOLD	Reserved, hysterisis level before s-ramp operates.
OUTPUT	Diagnostic, ramp output.

USEFUL EQUATIONS

Note: These only hold true is Jerk = Jerk2 for acceleration or Jerk 3 = Jerk 4 for deceleration.

V is the maximum speed the drive must reach. In % / sec

A is the maximum allowable acceleration in %/sec^2

J is the maximum allowable value for jerk, in %/sec^3

The time needed to stop or accelerate is:

$$t = \frac{V}{A} + \frac{A}{J} \text{ [Seconds]}$$

as the speed is symmetrical the average speed is V/2, therefore the stopping / acceleration distance can be calculated.

$$s = \frac{V}{2}\left(\frac{V}{A} + \frac{A}{J}\right) \text{[Meters]}$$

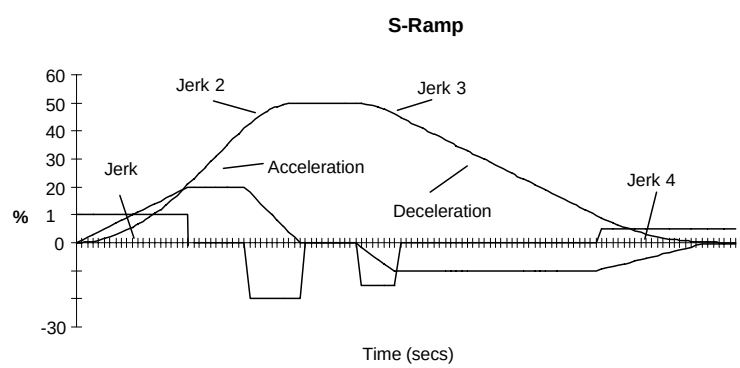

Figure 5.21 S-Ramp

Example acceleration graph for a velocity 60 %/s max. Acceleration of 20 %/s^2 and a jerk of 10 %/s^3

BLOCK DIAGRAM

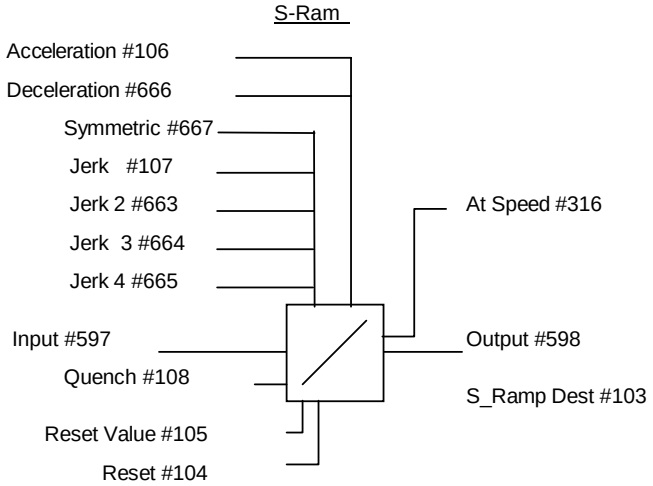

Figure 5.22 S-Ramp Block Diagram

HOME

If ENABLED the drive will use a position loop to stop the drive in a set number of encoder counts. This mode is triggered from an external input, usually from a mark at a fixed distance from the floor. One of two velocity profiles may be chosen, linear or square root, the square root profile leads to a linear deceleration where as linear profile will give as “s” shaped deceleration.

It is intended that homing is used to bring the motor to reset from a low speed (10%) over a relatively small distance (1 revolution).

MMI ENTRIES:

```
f.....HOME
f.......HOME                  [397] = FALSE
f.......HOMING DISTANCE [396] = 2048
f.......1/ENCODER SCALE [398] = 4.00
f.......LINEAR  O/P     [388] = FALSE
f.......OVERSHOOT LIMIT [773] = 1.00 %
f.......HOME INPUT            [394] = 0.00 %
f.......HOME OUTPUT     [395] = 0.00 %
```

BLOCK DIAGRAM

Speed Demand is the input to the speed loop.

Position Error is the distance in encoder pluses between the current position and Target position.

The homing distance is the stopping distance in encoder pulses.

$$SpeedDemand = \frac{PositionError}{HomingDistance} * SRampOutput$$

NOTES: POSSIBLE HOMING ERRORS

Motor:

100% Speed = 1500 RPM

5000 line encoder.

Gearbox 18:1 @ 2.5m/s)

Pulley 650mm diameter.

@ 2.5 m/s 1 revolution = 110 mm

Internally the encoder is multiplied by 4 so 1 rev. = 20,000 counts.

Relationship between encoder counts and travel in mm on the lift car.

@ 2.5 m/s 1 count = 0.0055mm

How far does the car travel between the detection of the homing sensor and the drive seeing the command ?

It will be assumed that the drive will be travelling relatively slowly when it receives the home command 1.5Hz = 0.75 RPM = 15 counts / ms = 0.0825 mm / ms.

Typically the worst case levelling error will therefore be 0.08 * (cycle time of lift controller + cycle time of the vector drive) = 0.08 * (10+10) = 1.6mm.

This can be halved to ± 1mm by adjusting the stopping distance by 1mm.

BLOCK DIAGRAM

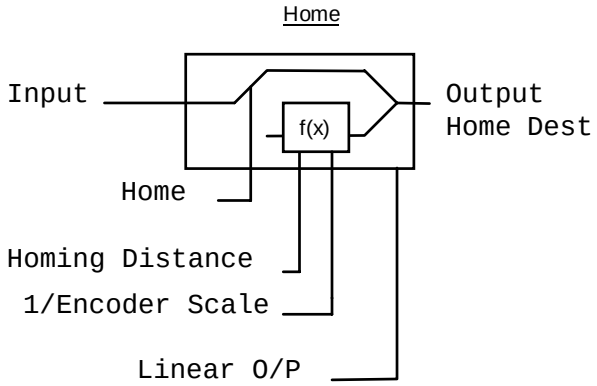

Figure 5.23 Home Block Diagram

PARAMETERS

1/ENCODER SCALE	Scalar for homing distance. A value of 4.00 has the effect of converting encoder counts into “lines”.
HOME	Trigger Input, enables the home function.
HOMING DISTANCE	Homing distance is specified in Encoder Counts * 1 / Encoder Scale, a 2048 line encoder equates to 8192 counts per revolution.
LINEAR O/P	Selects between linear and S velocity profiles, TRUE = Linear.
OVERSHOOT LIMIT	Internal.
HOME INPUT	Diagnostic.
HOME OUTPUT	Diagnostic.

OPERATORS

VALUE FUNC

The value function blocks can be configured to perform one of a number of functions upon a fixed number of inputs.

BLOCK DIAGRAM

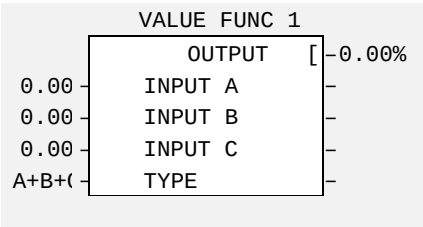

MMI ENTRIES:

```
f.....OPERATORS
f.......VALUE OPERATOR 1
f.........INPUT A [692] = 0.00 %
f.........INPUT B [693] = 0.00 %
f.........INPUT C [694] = 0.00 %
f.........TYPE [695] = IF(C) -A
f.........OUTPUT [696] = 0.00 %
f.......VALUE OPERATOR 2
f.........INPUT A [699] = 0.00 %
f.........INPUT B [700] = 0.00 %
f.........INPUT C [701] = 0.00 %
f.........TYPE [702] = IF(C) -A
f.........OUTPUT [703] = 0.00 %
f.......VALUE OPERATOR 3
f.........INPUT A [706] = 0.00 %
f.........INPUT B [707] = 0.00 %
f.........INPUT C [708] = 0.00 %
f.........TYPE [709] = IF(C) -A
f.........OUTPUT [710] = 0.00 %
f.......VALUE OPERATOR 4
f.........INPUT A [713] = 0.00 %
f.........INPUT B [714] = 0.00 %
f.........INPUT C [715] = 0.00 %
f.........TYPE [716] = IF(C) -A
f.........OUTPUT [717] = 0.00 %
```

If inputs and outputs are time values, divide the time in seconds by a factor of ten, i.e.

11.3 seconds = 1.13%.

Conversely, outputs are multiplied by a factor of ten to obtain their value in seconds.

Boolean inputs or outputs are FALSE if zero, and TRUE if non-zero.

PARAMETER DESCRIPTIONS

INPUT A General purpose input.

INPUT B General purpose input.

INPUT C General purpose input.

TYPE The operation to be performed on the three inputs to produce the output value.

Enumerated Value	Type
0	IF(C) -A
1	ABS (A+B+C)
2	SWITCH (A,B)
3	(A*B)/C
4	A+B+C
5	A-B-C
6	B <= A <=C
7	A>B+/-C
8	A>=B
9	ABS (A) >B+/-C
10	ABS (A) >=B
11	A(1+B)
12	IF (C) HOLD (A)
13	BINARY DECODE
14	ON DELAY
15	OFF DELAY
16	TIMER
17	MINIMUM PULSE
18	PULSE TRAIN
19	WINDOW
20	UP/DWN COUNTER

OUTPUT *Range: XXX.XX %*

The result of performing the selected operation on the inputs.

FUNCTIONAL DESCRIPTION

The OUTPUT is generated from the INPUTs according to the operation type selected. The output is always limited to be within the range -300.00% to +300.00%.

Operation	Description
IF(C) -A	If INPUT C is not zero the OUTPUT is minus INPUT A, otherwise the OUTPUT is the same as INPUT A.
ABS(A+B+C)	The OUTPUT is set to the absolute value of INPUT A + INPUT B + INPUT C.
SWITCH(A,B)	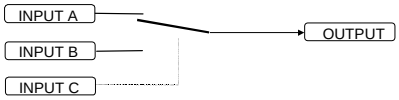 If INPUT C is zero the OUTPUT is set to INPUT A, otherwise the output is set to INPUT B
(A*B)/C	The OUTPUT is set to (INPUT A * INPUT B) / (INPUT C). The algorithm compensates for the remainder term.
A+B+C	The OUTPUT is set to (INPUT A + INPUT B + INPUT C).
A-B-C	The OUTPUT is set to (INPUT A - INPUT B - INPUT C).
B <= A <= C	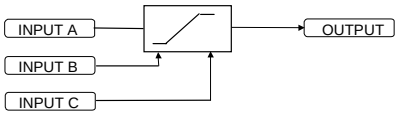 The OUTPUT is set to the value of INPUT A, limited to between a maximum value of INPUT C and a minimum value of INPUT B. If INPUT B is greater than INPUT C the output is undefined.
A>B+/-C	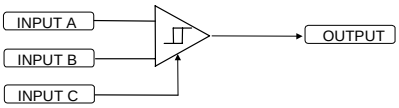 The OUTPUT is TRUE if INPUT A is greater than INPUT B + INPUT C. The OUTPUT is FALSE if INPUT A is less than INPUT B - INPUT C.
	Otherwise the OUTPUT is unchanged. In this way the block acts as a simple comparator with a comparison level of INPUT B and a hysteresis band equal to +/- INPUT C.
A>=B	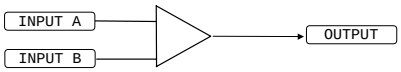 The OUTPUT is TRUE if INPUT A is greater than or equal to INPUT B, otherwise the OUTPUT is FALSE.
ABS(A)> ABS(B)+/-C	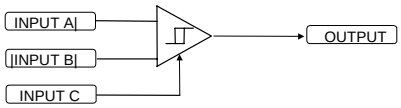 The OUTPUT is TRUE if the magnitude of INPUT A is greater than or equal to the magnitude of INPUT B - INPUT C.
	The OUTPUT is FALSE if the magnitude of INPUT A is less than the magnitude of INPUT B - INPUT C. Otherwise the OUTPUT is unchanged. In this way the block acts as a magnitude comparator with a comparison level of INPUT B and a hysteresis band equal to +/- INPUT C.
ABS(A)> =ABS(B)	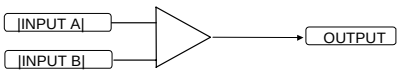 The OUTPUT is TRUE if the magnitude of INPUT A is greater than or equal to the magnitude of INPUT B, otherwise the OUTPUT is FALSE.

Operation	Description
A(1+B)	The OUTPUT is set to INPUT A + (INPUT A * INPUT B / 100.00).
IF(C) HOLD A	If INPUT C is zero, the OUTPUT is set to INPUT A, otherwise the OUTPUT is unchanged. On powering up the drive, the output will be pre-loaded with the last saved value of input B.
BINARY DECODE	The OUTPUT is set according to which of the INPUTs are non-zero. INPUT C / INPUT B / INPUT A / OUTPUT 0 / 0 / 0 / 0.00 0 / 0 / ≠0 / 0.01 0 / ≠0 / 0 / 0.02 0 / ≠0 / ≠0 / 0.03 ≠0 / 0 / 0 / 0.04 ≠0 / 0 / ≠0 / 0.05 ≠0 / ≠0 / 0 / 0.06 ≠0 / ≠0 / ≠0 / 0.07 In the above table, ≠0 indicates that the corresponding input is not zero.
ON DELAY	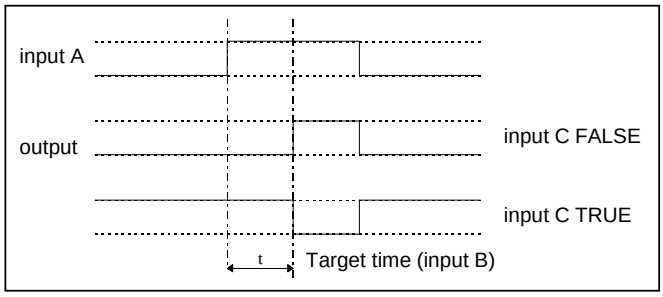 A programmable delay between receiving and outputting a Boolean TRUE signal. INPUT A becoming TRUE starts the delay timer. INPUT B sets the duration of the delay. At the end of the duration, OUTPUT becomes TRUE unless INPUT A has reverted to FALSE. Setting INPUT C to TRUE (≠0) inverts the output.
OFF DELAY	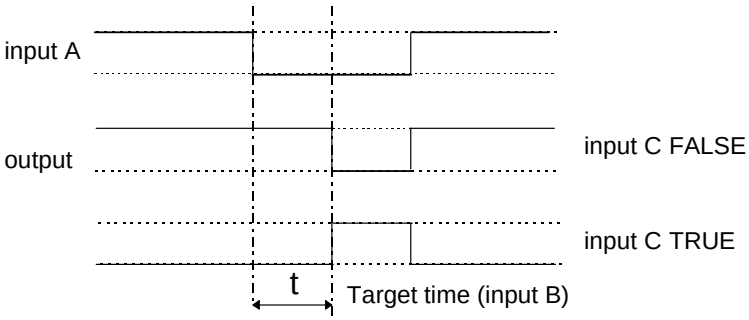 A programmable delay between receiving and outputting a Boolean FALSE signal. INPUT A becoming FALSE starts the delay timer. INPUT B sets the duration of the delay. Setting INPUT C to TRUE (≠0) inverts the output. At the end of the duration, OUTPUT becomes FALSE unless INPUT A has reverted to TRUE.

Operation	Description
TIMER	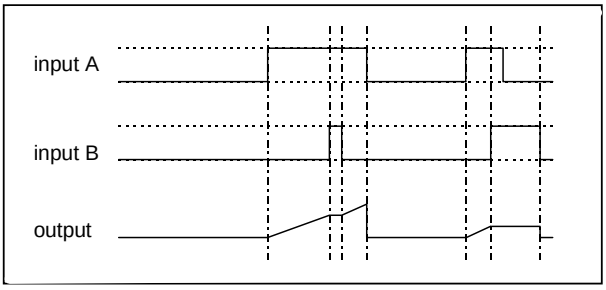 Times the period elapsed from when INPUT A is set TRUE and held TRUE, to when INPUT B becomes TRUE. OUTPUT is the duration of the timer, starting from zero. If INPUT B is TRUE, the value for OUTPUT is held until INPUT B is released. If on release INPUT A is still TRUE, the timer will continue from the held value. Setting INPUT A and INPUT B to FALSE resets the timer. INPUT C is not used.
MINIMUM PULSE	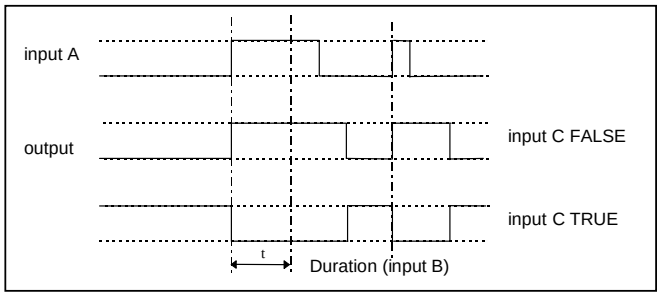 Creates an output pulse of adjustable minimum time when INPUT A is TRUE. (INPUT A is assumed to be a sequence of TRUE pulses and FALSE off periods.) INPUT B sets the length of the minimum pulse required. INPUT C inverts the output when TRUE. The duration of the pulse is at least the period set by INPUT B, or any multiple thereof up to a maximum of 3000 seconds.
PULSE TRAIN	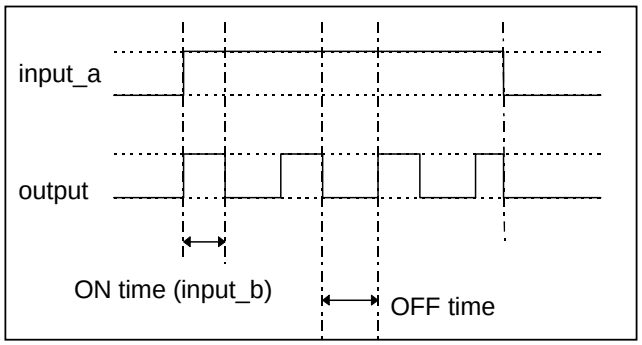 Creates a pulsed TRUE/FALSE output of programmable frequency. INPUT A enables the pulse train when TRUE, disables when FALSE. INPUT B sets the length of the on part of the pulse. INPUT C sets the length of the off part of the pulse.

Operation	Description
WINDOW	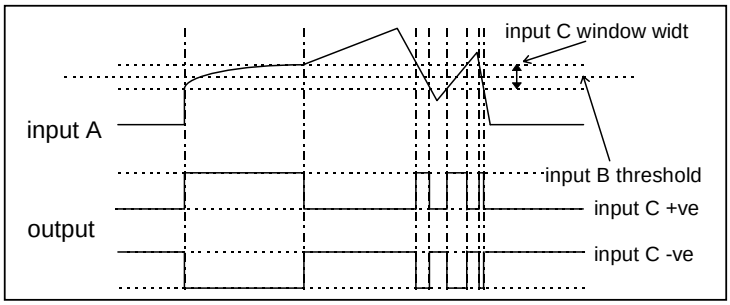 This function outputs TRUE when INPUT A is within a programmable range, and FALSE otherwise. INPUT B sets the threshold of the window to be monitored. INPUT C defines the range of the window around the threshold, i.e. if INPUT B = 5 and INPUT C = 4 then the range is 3 to 7. If INPUT C is set to zero, the output will only be TRUE if INPUT A is exactly equal to INPUT B (this is fulfilled in the default condition when inputs A, B & C are all zero) If INPUT C is set to a negative value, its absolute value defines the window range, and the output is inverted.
UP/DOWN COUNTER	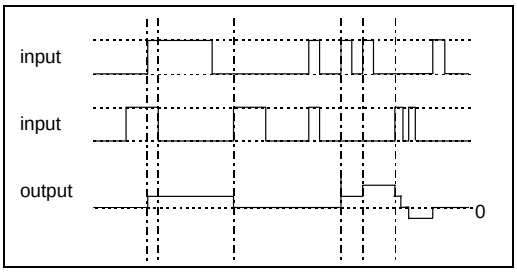 INPUT A provides a rising edge trigger to increment the output count by one. INPUT B provides a rising edge trigger to decrement the output count by one. INPUT C holds the output at zero. The output starts at zero. The output is limited at ±30000 (±300.00%).

LOGIC FUNCTION

These generic function blocks can be configured to perform one of a number of simple functions upon a fixed number of inputs.

BLOCK DIAGRAM

```
              LOGIC FUNC 1
              +-----------+
              |   OUTPUT  |-TRUE
     FALSI -  | INPUT A   |-
     FALSI -  | INPUT B   |-
     FALSI -  | INPUT C   |-
   NOT [ -    | TYPE      |-
              +-----------+
```

MMI ENTRIES:

```
f.......LOGIC OPERATOR 1
f.........INPUT A [720] = FALSE
f.........INPUT B [721] = FALSE
f.........INPUT C [722] = FALSE
f.........TYPE [723] = NOT(A)
f.........OUTPUT [724] = TRUE
f.......LOGIC OPERATOR 2
f.........INPUT A [727] = FALSE
f.........INPUT B [728] = FALSE
f.........INPUT C [729] = FALSE
f.........TYPE [730] = NOT(A)
f.........OUTPUT [731] = TRUE
f.......LOGIC OPERATOR 3
f.........INPUT A [734] = FALSE
f.........INPUT B [735] = FALSE
f.........INPUT C [736] = FALSE
f.........TYPE [737] = NOT(A)
f.........OUTPUT [738] = TRUE
f.......LOGIC OPERATOR 4
f.........INPUT A [741] = FALSE
f.........INPUT B [742] = FALSE
f.........INPUT C [743] = FALSE
f.........TYPE [744] = NOT(A)
f.........OUTPUT [745] = TRUE
```

PARAMETER DESCRIPTIONS

INPUT A	General-purpose logic input.
INPUT B	General-purpose logic input.
INPUT C	General-purpose logic input.
TYPE	*see below*

The operation to be performed on the three inputs to produce the output value. The operations that can be selected are:

Enumerated Value	*Type*
0	NOT (A)
1	AND (A,B,C)
2	NAND (A,B,C)
3	OR (A,B,C)
4	NOR (A,B,C)
5	XOR (A,B)
6	0-1 EDGE (A)
7	1-0 EDGE (A)
8	AND (A,B,!C)
9	OR (A,B,!C)
10	FLIP-FLOP

OUTPUT The result of performing the selected operation on the inputs.

FUNCTIONAL DESCRIPTION

Operation	Description	
NOT(A)	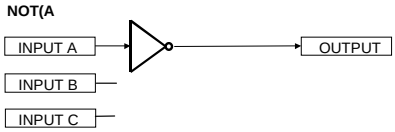	If INPUT A is TRUE the OUTPUT is FALSE, otherwise the OUTPUT is TRUE.
AND(A,B,C)	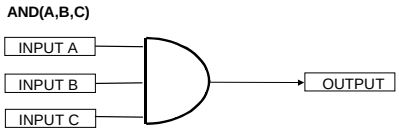	If A and B and C are all TRUE then the OUTPUT is TRUE, otherwise the OUTPUT is FALSE.
NAND(A,B,C)	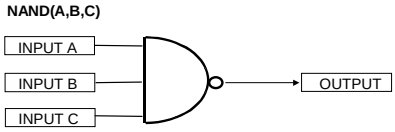	If A and B and C are all TRUE then the OUTPUT is FALSE, otherwise the OUTPUT is TRUE.
OR(A,B,C)	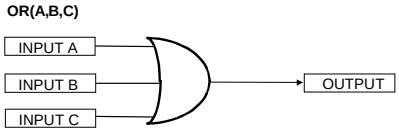	If at least one of A or B or C is TRUE then the OUTPUT is TRUE, otherwise the OUTPUT is FALSE.
NOR(A,B,C)	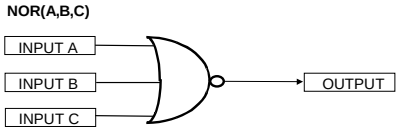	If at least one of A or B or C is TRUE then the OUTPUT is FALSE, otherwise the OUTPUT is TRUE.
XOR(A,B)	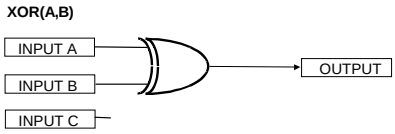	If A and B are the same, (both TRUE or both FALSE), then the output is FALSE, otherwise the output is TRUE.
0-1 EDGE(A)	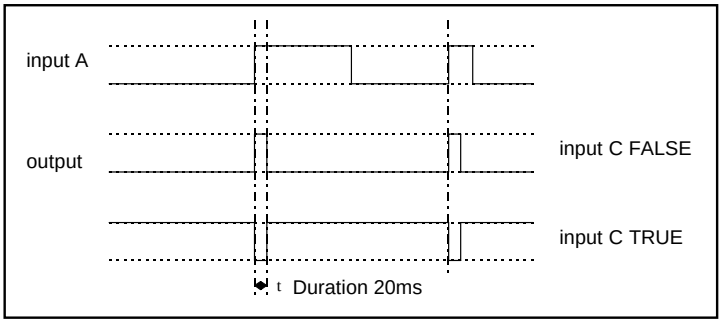 Rising Edge Trigger Input B is not used. This function outputs a pulse of 20ms duration when INPUT A to the block becomes TRUE. When INPUT C is TRUE, the output is inverted.	

Operation	Description
1-0 EDGE(A)	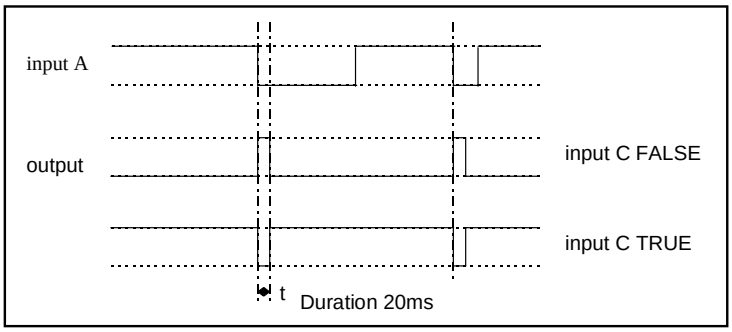 Falling Edge Trigger Input B is not used. This function outputs a pulse of 20ms duration when INPUT A to the block becomes FALSE. When INPUT C is TRUE, the output is inverted.
AND(A,B,!C)	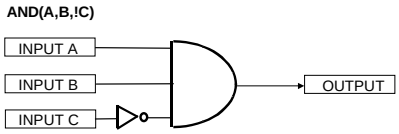 Refer to the Truth Table. FALSE = 0, TRUE = 1. Input State A B C Output State 0 0 0 0 0 0 1 0 0 1 0 0 0 1 1 0 1 0 0 0 1 0 1 0 1 1 0 1 1 1 1 0
OR(A,B,!C)	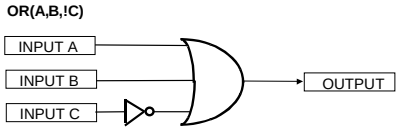 Refer to the Truth Table. FALSE = 0, TRUE = 1. Input State A B C Output State 0 0 0 1 0 0 1 0 0 1 0 1 0 1 1 1 1 0 0 1 1 0 1 1 1 1 0 1 1 1 1 1
FLIP-FLOP	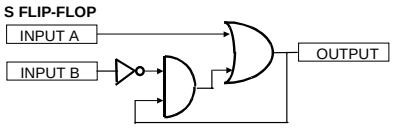 This is a set dominant flip-flop. INPUT A functions as set, and INPUT B as reset .

SERIAL LINKS

The 620 has 2 serial ports as standard, P1 and P3, these ports serve different purposes depending on the version of drive you have and the mode that the ports are operating in.

The 620 Comm is the only product that may use the two ports independently, the 620Std and 620Link may only use one port at a time.

P3 PORT

	P3 Mode DISABLE	5703 MASTER	5703 SLAVE	FIELD BUS	TAG LIST NEWPORT	CO-PROCESSOR	EI ASCII
620Std	UDP and MMI Transfers	5703 MASTER	5703 SLAVE	FIELD BUS	TAG LIST NEWPORT	N/A	EI ASCII
620Comm	UDP and MMI Transfers	5703 MASTER	5703 SLAVE	FIELD BUS	TAG LIST NEWPORT	Connected to P1	EI ASCII
620Lnk	UDP[1] and MMI Transfers	5703 MASTER	5703 SLAVE	FIELD BUS	TAG LIST NEWPORT	Link Configuration	EI ASCII

P1 PORT

On the 620Std and the 620lnk the P1 port is connected to the P3 port, the receivers are ORed together so it is important that only one port is used at a time.

	P1 Mode		
	Disable	**FIELD BUS**	**EI ASCII**
620Std	Same as P3	Same as P3	Same as P3
620Comm	Disabled	Connection to External network interface	EI ASCII
620Lnk	Same as P3	Same as P3	Same as P3

PORT P3

MMI ENTRIES

```
....SERIAL LINKS
......PORT P3
........P3 MODE [237] = EI BUSY*
........P3 BAUD RATE [241] = 9600
........DUMP MMI (TX) [238] = UP TO ACTION
h.......MEMORY DUMP [221] = FALSE
........UDP XFER (TX) [240] = UP TO ACTION
........UDP XFER (RX) [239] = UP TO ACTION
........ERROR REPORT [229] = 0x0000
h.......P3 TAG LIST
h.........TAG 1 [212] = 7
h.........P3 TAG LIST TC [318] = 0.10 SECS
```

[1] UDP uploads are not advised on the 620Lnk, Back up and restore procedures should be performed by the ConfigEd LINK programming tool.

SERIAL PORT SETUP

P3 MODE — Selects the operating mode of the P3 Serial port

Enumerated Value	Type
0	**DISABLED**
1	5703 MASTER
2	5703 SLAVE
3	FIELD BUS
4	TAG LIST NEWPORT
5	CO-PROCESSOR
6	EI ASCII

For file transfer select Option Board. During file transfers the mode is automatically set to the correct value. During MMI Download this is set to Busy.

P3 BAUD RATE — Sets baud rate for P3 serial port.
300, 600, 1200, 2400, 4800, **9600**, and 19200. Baud rates higher than 9600 may become unreliable with a PC.

FILE TRANSFER

MMI ENTRIES

DUMP MMI (TX)	Starts transmission of MMI Text file
UDP XFER (TX)	Starts transmission of UDP binary file
UDP XFER (RX)	Starts reception of UDP binary file

SUMMARY

The P3 port can be used to transfer an ASCII representation of the drive's settings between a 620 and a host computer.

The transfer uses simple ASCII file structure and XON / XOFF protocol. This is provided by most communications packages. Host computers tested include IBM PC XT and AT, running both Windows, MS-DOS and many more.

Transferring data from the 620 to a host computer is defined as downloading (TX) whereas transferring data from a host computer to the 620 is defined as uploading (RX).

COMMUNICATION PORT SET-UP

9600 Baud (configurable from MMI)

1 stop bit (fixed)

No parity (fixed)

8 bits (fixed)

XON/XOFF handshaking (fixed)

DUMP

This is the transfer of the MMI description from the 620 to a host computer. This information fully documents the 620's settings in a textual format that is clear and easy to read. The listing is of the drive's current settings, **not** the settings held in EEprom.

1. Connect the 620 to the host using the appropriate lead.
2. Using a standard communications package prepare the host to receive an ASCII file. Ensure the host's serial port is set-up first.
3. Save the 620's settings using the Parameter Save feature. This ensures the Dump matches the drive settings.
4. Set the **`P3 MODE`** to **`DISABLED`**.
5. Get the host ready to receive a file; use the file extension .MMI to differentiate it from .UDP format files.
6. Start downloading on the 620 by selecting **`DUMP MMI (TX)`**.

7. The file ends in a ctrl-z; some packages this automatically closes the file. If this is not the case, when the 620 says it has finished and the host has stopped scrolling text, close the file by hand.
8. The file can now be treated like any normal file.

UDP DOWNLOAD (UDP XFER TX)

This is the transfer of parameters from the 620 to a host computer. This information fully describes the 620's settings in a binary format. The listing is of the drive's settings currently held in EEprom, i.e. those that have been saved.

1. Connect the 620 to the host using the appropriate lead.
2. Using a standard communications package prepare the host to receive an ASCII file. Ensure the host's serial port is set-up first.
3. Save the 620's settings using the Parameter Save feature. This ensures the UDP file matches the drive settings.
4. Set the **P3 MODE** to **DISABLED**.
5. Get the host ready to receive a file; use the file extension .UDP to differentiate it from .MMI format files.
6. Start downloading on the 620 by selecting **UDP XFER (TX)**.
7. The file ends in a ctrl-z; some packages this automatically closes the file. If this is not the case, when the 620 says it has finished and the host has stopped scrolling text, close the file by hand. The last line should read **:00000001FF**
8. The file can now be treated like any normal file.

UDP UPLOAD (UDP XFER RX)

Caution

The 620 UDP files are not compatible with any other EUROTHERM Product.
Uploading a corrupted UDP file cause loss of data.

This is the transfer of parameters from the host computer to the 620. This information is written directly to EEprom, so all the drive's current settings will be overwritten.

1. Connect the 620 to the host using the appropriate lead.
2. Using a standard communications package prepare the host to transfer an ASCII file. Ensure the host's serial port is set-up first.
3. Set the **P3 MODE** to **DISABLE**.
4. Start uploading on the 620 by selecting **UDP XFER (RX)**.
5. When the 620 says "RECEIVING", begin the file transmission.
6. The file ends in a ctrl-z which the 620 uses to close the file.
7. Pressing the ‘E’ key must now resets the 620, as the message on the MMI indicates.

ERROR REPORT

ERROR REPORT	See EE ERROR CODES. NOTE: Writing to this parameter has the effect of resetting it.

EI ASCII

All these parameters are common between the P3 port and the P1 port.

MMI ENTRIES

```
....SERIAL LINKS
......PORT P3
......EI ASCII
........GROUP ID (GID) [223] = 0
........UNIT ID (UID) [224] = 0
f.......OPTION ADDRESS [230] = 0
f.......OPTION VERSION [672] = 0.00
```

MMI ENTRIES

GROUP ID (GID)	The GID and UID together form the logical address of the drive. This address is the same on both the P3 port and the P1 port (620COM only). The drive will always reply to a message addressed to GID, UID = 0,0 This has the effect of making address 00 a broadcast address and should not be selected in a Multi-drop network. If the drive is connected to a host via the P3 port, It is preferable that the drive is addressed as 00, so as not to conflict with the P1 address.
UNIT ID (UID)	Unit address, see GID.
OPTION ADDRESS	The address used by an external network interface card, for example the 6204 Profibus interface. This address is only read when the external interface initialises its self, so the power must be cycled after this parameter has been modified.
OPTION VERSION	The software version number of the external network interface card. This will be non-zero if the card has initialised correctly.

Note 1: OPTION ADDRESS and OPTION VERSION are only applicable if the port mode is field bus.

Note 2: Only one external network interface card may be attached to the 620 at a time.

SUMMARY OF EI-BISYNC

The EI-Bisync communications protocol may be used to connect to a PC running suitable software. By default, the ports operates at 9.6K Baud using the EI-Bisync ASCII protocol with Group ID = 0 and Unit Id = 0.

7 Data Bits
1 Stop Bit
Even Parity

Note 1: Before EUROTHERM ASCII communications may be used with the P3 port the “P3 MODE” must be set to ASCII.

COMMUNICATIONS PARAMETERS

There are two classes of parameters. These are:

- EI-Bisync prime set
- Command / Status

EI-BISYNCH PRIME SET

The following prime set parameters are supported:

Mnemonic	Description	Encoding	Range	Access
EE	Last Error Code	>XXXX	>0000 to >FFFF (Writing any value resets to >0000) Error codes are listed latter.	R/W
II	Instrument Identity	>XXXX	>0620	RO
LT	Last Tag	0.	Returns the last tag number	RO
RA	Absolute memory address for RD	>XXXX	Valid memory addresses	RW
RD	Read absolute memory address specified by RA length specified by RL		RS>Address US>Data1 US>Data2 … US>DataN	RO
RL	Length memory read by RD.	>XXXX	>0000 to >0008, length in words	RW
TA	Tag Address	0.	Set the tag address to be used by TI	RW
TI	Tag Info		RS TagAddress US>Address US>Data US>NegLimit US>PosLimit US Scale US>ReadOnly US> FactoryDefault[2]	RO
V0[3]	Main Software Version	>XXXX	>0001 to >FFFF[4]	RO
V2	Serial communications Software Version	>XXXX	>0001 to >FFFF	RO
VO[5]	Same as V0			RO

[2] P3 port only

[3] V0 ”Zero”

[4] Note - version 4.1 is encoded as `>0401`

[5] VO “Oh”

EE ERROR CODES

Value	Description
>0000	No error
>01C7	Invalid Mnemonic
>02C2	Checksum (BCC) error
>03C1	Line error, (parity, overrun or framing).
>04C8	Write only
>05C8	Read only
>07C8	Invalid Data (Encoding error)
>08C8	Data out of range
>0AC8	Tag initialisation error
>22CB	US control character expected
>23CB	RS control character expected
>24CB	GS control character expected
>25CB	FS control character expected
>26CB	Run Inhibit
>27CB	Configure Inhibit
>28CB	Tag is connected (unused)

Note: the 3dr digit "C" is used to denote a "Drive" instrument type. Older drives used to use an "F" in this location to denote "Other" instrument type.

COMMAND / STATUS

The following command / status parameters are supported:

Mnemonic	Description	Encoding	Range	Access
!1	Command	>XXXX	See Below	Write Only
!2	State	>XXXX	See Below	Read Only
!3	Save Command	>XXXX	See Below	Write Only
!4	Save State	>XXXX	See Below	Read Only

COMMAND (!1)

Command (!1) is a write only parameter used to modify the state of the 620 and to load configuration data from non-volatile memory.

The following table lists the valid values for the request:

Value	Description
>1111	Restore Factory Defaults, P3 port only
>4444	Exit Re-Configuration Mode
>5555	Enter Re-Configuration Mode

State (!2)

State (!2) is a read only parameter used to determine the major state of the 620.

The following table lists the valid values for the response:

Value	Description
>0004	Re-Configuring Mode
>0005	Normal Operation Mode

Save Command (!3)

Save Command (!3) is a write only parameter used to save the configuration and product code in non-volatile memory.

The following table lists the valid values for the request:

Value	Description
>0000	Reset Command. Acknowledges (clears) any previous save error.
>0001	Saves Configuration to drive's non-volatile memory.

Save State(!4)

Save State (!4) is a read only parameter used to determine the progress of a non-volatile saving operation.

The following table lists the valid values for the response:

Value	Description
>0000	Idle
>0001	Saving
>0002	Failed

TAG ACCESS

All user parameters are accessible using a communications mnemonic derived from the tag number.

PARAMETER MAPPING

The algorithm to convert between tag number and 2-character mnemonics is as follows:

```
m = int(TagNo / 36)
n = TagNo - (m * 36)
if  m > 9 then
 char_1 = 'a' + (m - 10)
else
 char_1 = '0' + m
end_if
if  n > 9 then
 char_2 = 'a' + (n - 10)
else
 char_2 = '0' + n
end_if
```

The algorithm generates mnemonics containing only the characters '0' to '9' and 'a' to 'z'.

ENCODING

The following table summarises the parameter types and their encoding:

Type	Description	Encoding	Comments
BOOL	Boolean	FALSE >00 TRUE >01	Will accept >0 and >1
WORD	16-bit Bit-string	>0000 to >FFFF	Will accept leading zero suppression, except >0
INT	16-bit Signed Integer	-XXXXX. to XXXXX. -XXXX.X to XXXX.X -XXX.XX to XXX.XX -XX.XXX to XX.XXX -X.XXXX to X.XXXX	Leading zeroes suppressed upto digit before decimal point. Trailing zeroes suppressed after decimal point.
TAG	Link Tag No.	XXXX.	As above.

Note - The "." in the above formats is not optional. It must be sent to conform to the EI-Bisync standard.

MESSAGE FORMAT

READING DATA

Control Characters

Control Characters are ASCII binary codes which define actions rather than information. The six ASCII codes used are defined in Table 5.2.

ASCII-HEX	Control	Mnemonic	Definition
02h	^B	(STX)	Start of Text
03h	^C	(ETX)	End of Text
04h	^D	(EOT)	End of Transmission
05h	^E	(ENQ)	Enquiry
06h	^F	(ACK)	Positive Acknowledge
0Dh	^M	(CR)	Carriage return
15h	^U	(NAK)	Negative Acknowledge
1Bh		(ESC)	Escape
1Eh		(RS)	Record separator
1Fh		(US)	Unit separator

Table 5.2 - Control Character Definitions

Enquiry

The computer initially has master status with the 620 in slave status. The computer begins communication by transmitting a message, known as the "establish connection" message, which is represented by the following format:-

(EOT) (GID) (GID) (UID) (UID) (C1) (C2) (ENQ)

EXAMPLE:

Read mnemonic II at address 00, using a terminal emulator key in the following. A carriage return may also be necessary.

Send

^D 0 0 0 0 I I ^E

Receive

(STX) I I > 0 6 2 0 (ETX) (BCC)

These symbols are defined as follows:

(EOT)	This control character resets all instruments on the link and causes them to examine the next four transmitted characters to see if they correspond with their group/unit address identifiers.
(GID)	These characters represent the group address identifier, repeated for security.
(UID)	These characters represent the required unit address identifier, repeated for security. (Together GID and UID define the address of a particular instrument). If, for example, GID = 3 and UID = 4, then the instrument to be addressed is number 34.
(CI)(C2)	These characters specify the parameter by mnemonic.
(ENQ)	This character indicates the end of the message, and that it is an enquiry.

The transmission of this message initiates a response procedure from the 620.

Valid Response of the 620 to this Message

After the message has been sent, the computer adopts slave status and expects to receive a reply from the 620. In so doing, the 620 assumes Master status and, providing the 620 has successfully received the message in full, it responds in the following form:

(STX) (C1) (C2) (D1) (D2) (D3) (Dn) (ETX) (BCC)

Which constitutes a message defined as:

(STX)	Start of text.
(C1)(C2)	Parameter specified by mnemonic.
(D1 to Dn)	Value of the requested parameter (string may be of any length as determined by the data). The 620 responds with the shortest message that represents the data value. If the data value is an integer then it does not send a decimal point. Trailing zeros in the decimal part are not sent.
(ETX)	End of text.
(BCC)	Block check character which is the character generated by taking the exclusive OR of the ASCII values of all the characters transmitted after and excluding (STX) up to and including (ETX). e.g. if a message with (D1 - Dn) is 5 characters (BCC) = (C1) EOR (C2) EOR (D1) EOR (D2) EOR (D3) EOR (D4) EOR (D5) EOR (ETX) where EOR = Exclusive OR

The computer must check this (BCC) before accepting this reply as valid. Also the software must be able to extract the number from the data string taking into account the protocol of the data transmission.

NOTE: If the 620 receives the message but does not recognise the mnemonic it will respond with (EOT). The (EOT) hands back control to the computer.

Further Enquiry and Termination

The computer then assumes master status again and three options are available:

1. Repeat Parameter Facility (NAK). If the computer transmits a (NAK) after the valid reply, it causes the 620 to repeat the parameter that was just received. This allows continuous monitoring of the same parameter without having to re-establish the connection.

2. Scroll Mode Facility (ACK). If the computer transmits an (ACK) after a valid 'reply', it causes the 620 to fetch the next parameter from the parameter list. This facility enables the computer to sequence continuously through all the parameters of the 620.

3. Terminate Communication (EOT). The termination procedure is entered when the selection of a particular instrument is no longer required or when a 620 does not respond to a message or replies with an (EOT) character. The computer assumes Master status and transmits an (EOT) character to enable all the instruments on the data link to respond to the next GID-UID address parameter.

No Response

Under certain circumstances the computer may not receive a response from the 620. This could be due to any of the following reasons:

1. Group/Unit address identifiers not recognised.

2. An error (e.g. parity) is found in one or more of the characters up to and including ENQ.

3. Communications loop failure, perhaps due to noise or wrong baud rate being selected.

4. Hardware failure.

In these cases the computer should be programmed to "time-out", i.e. wait for a response for a short time (160ms minimum) before trying again.

The sequence diagram for the data read function is given in Figure 5.24.

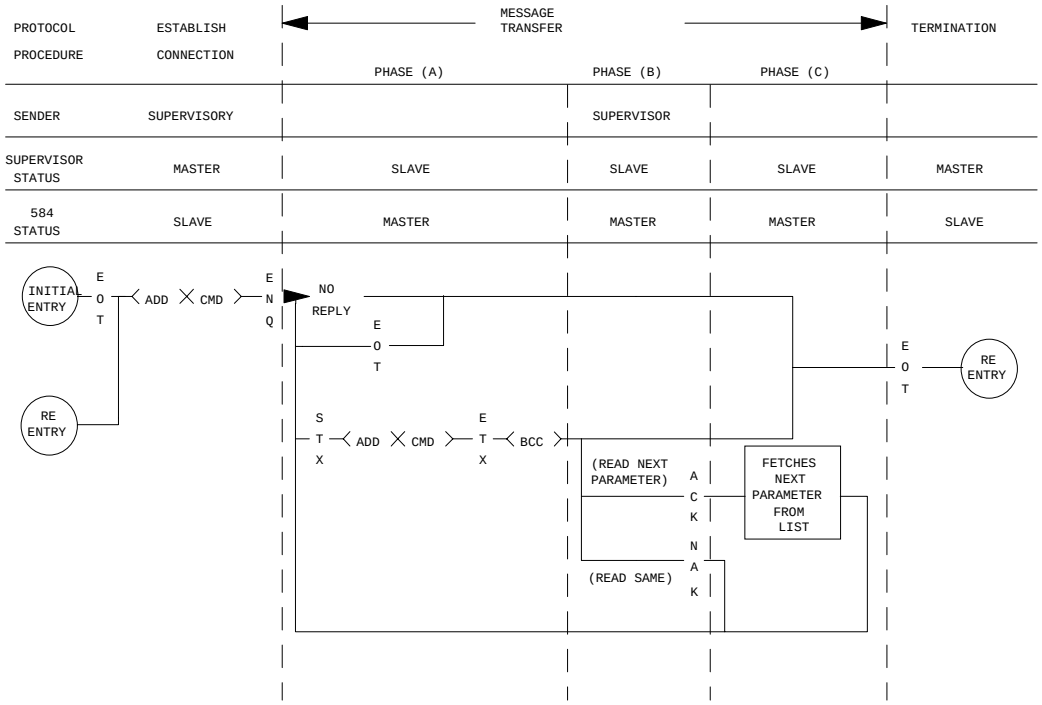

Figure 5.24 - Reading Data From The 620

SENDING DATA

Establish Connection

Connection is established with a particular 620 by sending:

(EOT) (GID) (GID) (UID) (UID)

Followed immediately by the data transfer:

(STX) (C1) (C2) (D1) (D2) (D3) (DN) (ETX) (BCC)

(Note that the data transfer message is identical to that transmitted by a 620 when giving a "valid reply").

The symbols of this message are defined as follows:

(STX)	start of text character
(C1)(C2)	parameter specified by mnemonic
(D1 to DN)	parameter value
(ETX)	end of text character
(BCC)	Block Check Character (verification check digit which is again the exclusive OR of (C1) to (ETX) inclusive and must be calculated by the computer before transmission)

Responses

After transmission of the whole message, the 620 responds to it by sending (ACK), (NAK) or by giving no reply.

1. Positive acknowledgement (ACK)

   When the 620 has received the message, it performs the following tasks:

   a) Checks for any parity errors in the message.

   b) Verifies that the (BCC) character corresponds to the data pattern received.

   c) Verifies that the (C1), (C2) command characters are a valid mnemonic that may be written to.

   d) Verifies that the data (D1 to DN) is valid and not out-of-range[6].

   e) Updates the selected parameter with the new value contained in the message.

   Only when all these tasks have been successfully completed does the 620 send the (ACK) response to the computer. This signifies that the message was correctly received and implemented.

2. Negative acknowledgement (NAK)

   If the message fails any of the above checks, the 620 sends (NAK) response to the computer. This signifies that the message received by the 620 contained an error and accordingly it has not updated the selected parameter. One possible reason is the incorrect calculation of (BCC). At this point, the selected command may be repeated by sending the data transfer string without re-establishing connection, until the computer receives the (ACK) response.

3. No Reply

   Under certain circumstances, the computer may not receive a response from the 620. This could be due to any of the following reasons:

[6] Data out-of-range returns NAK and is discarded

a) Unit address identifiers not recognised.

b) An error (e.g. parity) is found in one or more of the characters up to and including (BCC).

c) Communications loop failure perhaps due to noise or wrong baud rate selected.

d) Hardware failure.

In these cases the computer should be programmed to 'time-out', i.e. wait for a response for a short time (160ms minimum) before trying again.

The sequence diagram for the data send function is given in Figure 5.25.

Termination

The termination procedure is used if the computer wishes to stop selecting a particular 620 and establish connection with another. This is achieved by sending the 'establish connection' sequence. The computer retains Master status and transmits an (EOT) character to reset all instruments on the data link to be responsive to the next GID-UID address parameter.

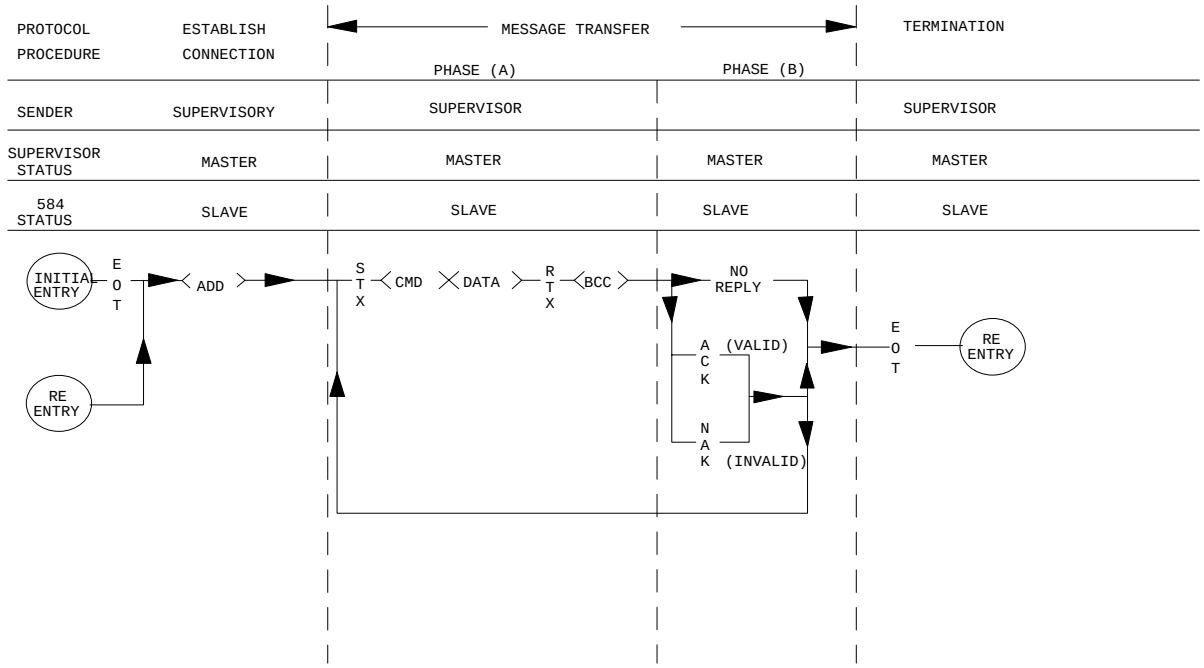

Figure 5.25 - Sending Data to the 620

5703 SUPPORT

MMI ENTRIES

```
....SERIAL LINKS
......PORT P3
......EI ASCII
f.....5703 SUPPORT
f.......SETPT. RATIO [233] = 1.0000
f.......INVERT SETPOINT [234] = FALSE
f.......SCALED INPUT [235] = 0.00 %
f.......RAW INPUT [584] = 0.00 %
f.......OUTPUT [236] = 0.00 %
```

5703 SUPPORT

This unit provides the facility to run a line of drives in speed-lock without the use of a 5720 Quadraloc controller; for accurate speed holding encoder feedback is required. Ratioed speed locking is supported, although the unit is not intended to supplant Quadraloc in applications requiring high accuracy.

A 16-bit signal is passed between drives through a fibre-optic link and the P3 port on each 620 drive. The port operates RS232-compatible signal levels, which the 5703 converts to light for fibre-optic transmission, and from fibre-optic to RS232 for reception.

HARDWARE

The 5703 are housed in a DIN rail mounted boxes and are provided with a ribbon cable to connect it to the P3 port. While cable is of a fixed maximum length of 400mm to limit transmission errors, the primary unit to unit interconnection is intended to be achieved by a fibre-optic cable.

The 5703 unit itself is simply an electric signal-to-light converter, and as such does not alter the signal in any way. This is achieved within the software of the 620 converter.

The 5703 is fitted with one fibre-optic receiver and two fibre-optic transmitters. The receiver has a fixed function to receive data from the 'preceding' unit while one of the transmitters sends data to the 'following' unit. The additional transmitter can be used either to re-transmit the incoming signal or provide a second transmission of the output signal, giving the unit wide functionality. When the link is in the normal right-hand position (assuming the board is mounted with the fibre-optics downward) the second transmitter repeats the output signal. In the left-hand position it repeats the input signal.

$$Output = \left(\frac{Input_n \times Ratio_n + Input_{n-1} \% Ratio_{n-1}}{100\%} \right)_{-limit}^{limit} \times sign_{-1}^{+1}$$

The 5703 can be configured to point to any relevant parameter in the block diagram, the default connections are such that the scaled input is connected to the 'additional speed demand' and the output to the 'speed demand'.

Possible additions include the sending of multiple parameters and the ability for masters to receive as well as transmit data.

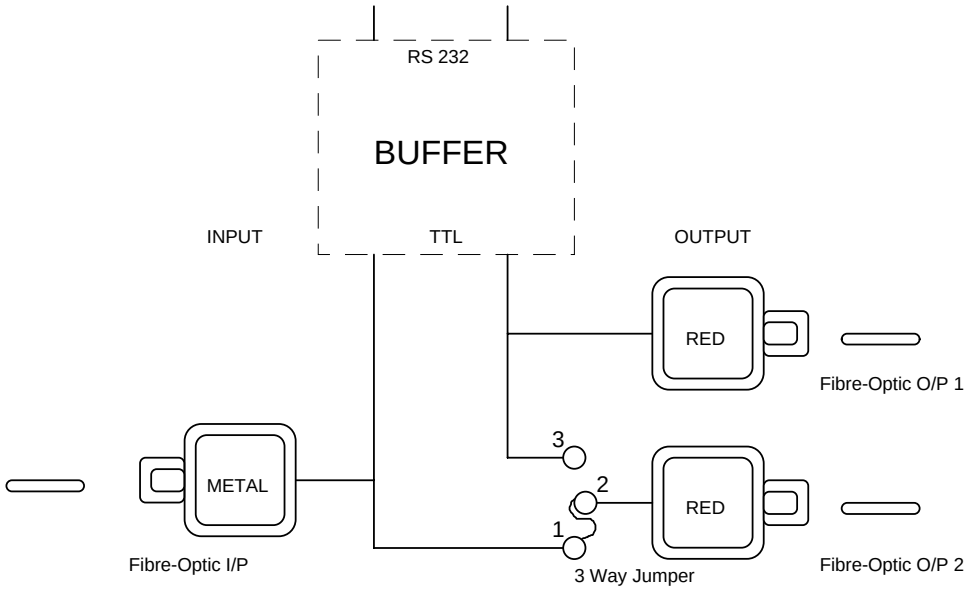

Figure 5.26 5703 Block Diagram

RCV ERROR

The P3 serial port in the 5703-support mode (i.e. setpoint repeater) receives and transmits information to other 620 controllers. During the receive cycle it checks that the data received is valid. If invalid, it raises an alarm. This is only applicable in the SLAVE mode of operation.

Alarm delay time: 1.5 Secs.

MMI ENTRIES

SETPT. RATIO	Scalar input
INVERT SETPOINT	Inverts sign of input.
SCALED INPUT	Input diagnostic (Raw Input x Scale x Sign)
RAW INPUT	Raw input diagnostic
OUTPUT	Diagnostic of P3 output.

5703 PROTOCOL SPECIFICATION

This describes the protocol used for the drive to drive communications serial link, or "P3 Port". It is commonly used with the 5703 fibre optic isolation interface products for drive to drive communications.

5703 PROTOCOL

The character format is fixed at:

Single parameter, no acknowledgement.
8 Data Bits,
1 Stop Bit,
No Parity

First char.	n+1	n+2	n+3	End Char.
%	High Data Byte	Low Data Byte	Checksum	<CR>

Table 5.3 5703 Telegram

% - The percent character. This is the message start character.

Checksum - the sum of The Low and High data bytes

<CR> - Carriage return character. This is the message end character.

If any errors occur during transmission, the message is discarded by the receiver, alarm is generated by the receiver (slave) if too many consecutive errors or time outs occur.

At 19200 Baud, the approximate maximum transmission rate is 1 message every cycle of the block diagram. This is the maximum transmission rate.

SERIAL LINK PORT P3 LEAD

Caution

There is 24V On Pin 2 of the P3 Port. This may damage your PC or the 620 if connected to the serial port.

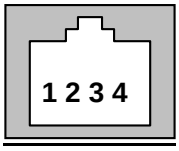

Figure 5.27 P3 Port

P3 Port	P3 Signal	Female DB9	Female DB25
1	Ov	5	7
2	24v	N/C	N/C
3	RX	2 (Tx)	3 (Tx)
4	TX	3 (Rx)	2 (Rx)

Table 5.4 Lead pin allocation

DISPLAY STATION (D.P.M.)

For information only.

NEWPORT 6155AS REVISION B ONWARDS

More information on the Newport 6 Digit serial input remote display is available from:

USA
Newport Electronics Inc.
Phone (714) 540-4914
Fax: (714) 546-3022

Germany
Newport Electronics GmbH
Phone: (07056) 3017
Fax: (07056) 8540

France
Newport Electronics S.A.R.L
Phone: (1) 30.62.14.00
Fax: (1) 30.69.91.20

Benelux (NL)
Newport Electronics B.V.
Phone: (020) 6418405
Fax: (020) 6434643

UK
Newport Electronics U.K.
Phone: (01455) 285998
Fax: (01455) 285604

ASCII hex	Code	Keyboard Character	Function
04	EOT	Ctrl D	Switches display to BS4504 Mode
02	STX	Ctrl B	Start Message
03	ETX	Ctrl C	End Message

Table 5.5 ASCII Codes

Message Format

<EOT><GID><GID><UID><UID><STX><Indicator><DATA><ETX>

<GID> is fixed at '1' defined by Newport standard.

<UID> is calculated from the position in the tag list, the first tag has address '1'

<Indicator> This toggles the indicator led on the op station to signal data updates.

<DATA> 6 characters padded with spaces containing an ASCII representation of the data with any necessary formatting.

<ETX> the message.

DIP Switch Settings

```
1 2 3 4 5 6 7 8
1 0 0 0 0 0 1 0
1 0 0 0                 = Address 11 GID UID. This is the best address for TAG #1
        0 0             = Baud 9600
            10          = Strobed the characters are displayed once a CR is received
```

Jumpers

DFI (± 15V RS232)

PORT P1

MMI ENTRIES

```
....SERIAL LINKS
......PORT P3
......EI ASCII
f.....5703 SUPPORT
f.....PORT P1
f.......P1 MODE [227] = EI ASCII
f.......P1 BAUD RATE [228] = 9600
f.......ERROR REPORT [776] = 0x03C1*
```

P1 MODE

Selects the operating mode of the P3 Serial port,

Enumerated Value	Type
0	**DISABLED**
1	EI ASCII
2	FIELD BUS

P1 BAUD RATE

Sets baud rate for P3 serial port.

300, 600, 1200, 2400, 4800, **9600**, and 19200. Baud rates higher than 9600 may become unreliable with a PC.

ERROR REPORT

See EE ERROR CODES.

NOTE: Writing to this parameter has the effect of resetting it. The value is also reset by the P1 port.

PASSWORD

MMI ENTRIES

```
....PASSWORD
......ENTER PASSWORD   [200] = 0x0000
......CHANGE PASSWORD  [201] = 0x0000
```

The 620 Vector Drives have a password system which can be used to prevent unauthorised access to the set-up parameters. Once the user has set a password then the set-up parameters become read-only. Order to change the parameter values the correct password must first be entered.

All drives shipped from the factory have a default password value of 0000.

The **PASSWORD** sub menu has 3 entries as follows:

ENTER PASSWORD	This option is used to enter the password to regain access the set-up parameters. Password value entered must match the value previously set up in the CHANGE PASSWORD menu to gain access to the set-up parameters.
CHANGE PASSWORD	This option is used to change the password or to initially a user password. A password has been set up, the PARAMETER SAVE menu be used to save the password in non-volatile.
CLEAR PASSWORD	This option is used to clear the password value displayed under the ENTER PASSWORD menu. This menu is accessed the ENTER PASSWORD value is to "0000". The CHANGE PASSWORD value is-zero then the set-up parameters will be locked.

EXAMPLE 1: PROGRAMMING OF PASSWORD

1) Access the **CHANGE PASSWORD** menu. display will show:

```
CHANGE PASSWORD
0x0000
```

2) Using the up and down arrow keys, set the password value required as a 4 digit hexadecimal number. display will show, for example:

```
CHANGE PASSWORD
0x1234
```

3) When you are happy with the password make a note of the value and keep it in a safe place.

4) Press the 'E' key to take you out of the `CHANGE PASSWORD` menu. Display will show:

5) This is to remind you to save the password along with the other parameters before you remove power from the drive. the 'E' key again to exit the `CHANGE PASSWORD` menu.

6) Access the **CLEAR PASSWORD** menu and press the 'M' key. Display will show:

CLEAR PASSWORD
PASSWORD CLEARED

7) This indicates that the password value entered above has been locked into the system. **CLEAR PASSWORD** sets the value in the **ENTER PASSWORD** menu to **0x0000**, otherwise the password would still be displayed.

8) The set-up parameters are now locked. to use **PARAMETER SAVE** put the password value in non-volatile memory. you now go back to the **CHANGE PASSWORD** menu the password value is hidden and the display will show:

CHANGE PASSWORD
****

EXAMPLE 2: SET-UP PARAMETERS WHEN THE PASSWORD IS SET

1) Access the **ENTER PASSWORD** menu. display will show:

ENTER PASSWORD
0x0000

2) Use the up and down arrow keys to select your password.

3) Press the 'E' key to exit the **ENTER PASSWORD** menu.

4) Access the **SETUP PARAMETERS** menu to make any necessary changes.

5) When all parameter changes have been made come back to the **CLEAR PASSWORD** menu to hide the password value and lock the set-up parameters again.

EXAMPLE 3: A PREVIOUSLY SET PASSWORD

1) Access the **ENTER PASSWORD** menu.

2) Use the up and down arrow keys to enter the existing password value.

3) Leave the **ENTER PASSWORD** menu and access the **CHANGE PASSWORD** menu.

4) Use the up and down arrow keys to select a new password value.

5) Leave the **CHANGE PASSWORD** menu and access the **CLEAR PASSWORD** menu.

6) Press the 'M' key to clear the password value and lock the set-up parameters.

7) Remember to use **SAVE PARAMETERS** to save the new password value in non-volatile memory.

ALARM STATUS

MMI ENTRIES

```
....ALARM STATUS
......HEALTH STORE     [203] = 0x0000
......HEALTH word      [217] = 0x0010
......FIRST ALARM      [218] = 0x0010
h.....HEALTH INHIBIT   [219] = 0x0000
```

MENUS

MMI ENTRIES

```
....MENUS
......FULL MENUS       [205] = FALSE
f.....MENU DELAY       [206] = 0
f.....DATA DELAY       [207] = 50
```

PARAMETERS

Full Menus	If False, the MMI will not display tags marked as ‘f’ or ‘h’.

PARAMETERS SAVE

This menu is used to save all of the drive parameters in the non-volatile memory. The UP arrow as instructed on the second line of the MMI display (UP TO ACTION) to save the drive parameters.

SYSTEM / SOFTWARE INFO

Diagnostic information about the current software and hardware build of the drive.

```
......SOFTWARE INFO
........620 VERSION [782] = 4.1
f.......P1 VERSION [226] = 1.1
f.......CO-PRO PRESENT [150] = TRUE
f.......CO-PRO TYPE [781] =         1
f.......DRIVE RATING RMS [133] =       9.4 AMPS
f.......MID VOLTS [151] = TRUE
f.......CHASSIS TYPE [152] =         4
```

SOFTWARE

This shows the software release number. The 620 UDP parameter files are compatible between releases w.x and y.z where z > 1.

SYSTEM / PERSISTENT DATA

MMI ENTRIES

```
....SYSTEM
h.....PERSISTENT DATA
h......./WRITE           [682] = FALSE
h.......TAG No 1         [679] = 0
h.......TAG No 2         [680] = 0
h.......COUNT            [681] = 0
```

APPLICATION NOTE: SAVING RAISE LOWER OUTPUT ON POWER LOSS.

The TAG No 1 and TAG NO 2 are saved to EEprom on the falling edged of /WRITE.

STEP 1

Configure the persistent data function to point to the tags that you wish to saved on power down, in this case TAG 678 the raise lower initialisation value..

```
...SYSTEM
h...PERSISTENT DATA
h...../WRITE           [682] = FALSE
h.....TAG No 1         [679] = 678
h.....TAG No  2        [680] = 0
h.....COUNT            [681] = 0
```

STEP 2

Set up the under voltage trip level this needs to be high that the hardware trip level set a 415v DC on a 400v drive but lower enough not to cause too many writes. A value of 440v is a good default value.

```
..ALARMS / SEQ
h..UNDER V LEVEL    [685] =       440 VOLTS
h../UNDER VOLTS     [686] = TRUE
```

STEP 3

Link the under voltage trip flag to the /Write input of the persistent block.

```
...INTERNAL LINKS
f....LINK 1 SOURCE    [180] =         686
f....LINK 1 DEST      [181] =         682
```

STEP 4

Link the under voltage trip flag to Aux. Enable. This will quench the drive giving us the maximum chance of being able to save the data.

```
...INTERNAL LINKS
f....LINK 2 SOURCE    [182] =         686
f....LINK 2 DEST      [183] =         68
```

NOTES:

The Value of PERSISTENT DATA::COUNT should be monitored to check that it is approximately equal to the number of power downs. The Eeprom is only rated for 10000 writes.

The Persistent data is not saved in the same area as the parameter data, any error in the data's integrity will be flagged at power up. Pressing the 'E' key acknowledges the fault.

If this happens the drive reverts to the last saved value on the tags.

If the tag numbers of the persistent data area are different the data is also lost. This may happen if you change the tag list.

SYSTEM /CONFIGURE I/O

CONFIGURE ENABLE

During the process of reconfiguration there is a danger that Tag numbers will be connected to wrong parameters. To avoid this possibility all configuration links must be temporarily "disconnected" during the configuration process and the flag set to "enabled" to allow the activity. Failure to reset the flag to "disabled" after reconfiguration will cause an alarm to be generated, "Configure Enabled", which will prevent drive operation.

ANALOGUE INPUTS

MMI ENTRIES

```
f.......ANALOG INPUTS
f.........ANIN 1 (C3)
f...........CALIBRATION [248] =    100.00 %
f...........OFFSET [358] =      0.00 %
f...........MAX VALUE [249] =    100.00 %
f...........MIN VALUE [250] =   -100.00 %
f...........DESTINATION TAG [251] =       196
f...........SCALED INPUT [390] =      0.00 %
f...........ANIN 1 (C3) [29] =     0.000 VOLTS
f.........ANIN 3 (F2)
f...........CALIBRATION [256] =    100.00 %
f...........OFFSET [360] =      0.00 %
f...........MAX VALUE [257] =    100.00 %
f...........MIN VALUE [258] =   -100.00 %
f...........DESTINATION TAG [259] =       197
f...........SCALED INPUT [391] =      0.00 %
f...........ANIN 3 (F2) [31] =     0.000 VOLTS
f.........ANIN 4 (F3)
f...........CALIBRATION [261] =    100.00 %
f...........OFFSET [361] =      0.00 %
f...........MAX VALUE [262] =    100.00 %
f...........MIN VALUE [263] =   -100.00 %
f...........DESTINATION TAG [264] =         0
f...........SCALED INPUT [392] =      0.00 %
f...........ANIN 4 (F3) [32] =     0.000 VOLTS
f.........ANIN 5 (F4)
f...........CALIBRATION [266] =    100.00 %
f...........OFFSET [362] =      0.00 %
f...........MAX VALUE [267] =    100.00 %
f...........MIN VALUE [268] =   -100.00 %
f...........DESTINATION TAG [269] =         0
f...........SCALED INPUT [393] =      0.00 %
f...........ANIN 5 (F4) [33] =     0.000 VOLTS
h.........ANIN FILTER [671] =     0.800
```

BLOCK DIAGRAM

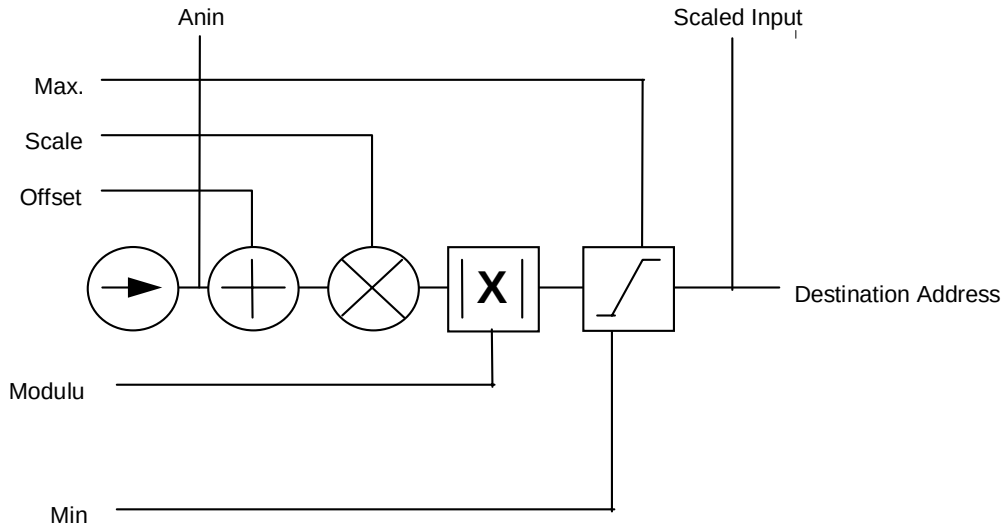

Figure 5.28 Analogue I/P

ANIN 1 (C3), ANIN 3 (F2), ANIN 4 ((F3) AND ANIN 5 (F4)

CALIBRATION	Analogue input scaling ratio.
OFFSET	maximum value of scaled analogue input.
MAX. VALUE	maximum value of scaled analogue input.
MIN VALUE	Minimum value of scaled analogue input.
DESTINATION TAG	Destination N° of scaled analogue input value.
SCALED INPUT	Diagnostic (Block Diagram %)
ANIN	Diagnostic (Terminal Volts)

ANIN 2 (C4)

Analogue Input 2 (terminal A3) is not re-configurable. The calibration for this channel is found in **SETUP PARAMETERS::SPEED LOOP::SETPOINTS::RATIO 2 (A3).**

Analogue input 2 is a direct input into the speed loop / current loop and it is scanned synchronously with the current loop (typically every 1.1.mSecs) rather than every micro cycle time. Therefore it should be used for any signal whose response is critical e.g. a trim input from microloc, cut to length applications etc.

ALOGUE OUTPUTS

MMI ENTRIES

```
f.......ANALOG OUTPUTS
f.........ANOUT 1 (C5)
f...........% TO GET 10V [272] =    100.00 %
f...........OFFSET [332] =      0.00 %
f...........HARDWARE OFFSET [676] =      0.00 %
f...........CALIBRATION [330] =    100.00 %
f...........MODULUS [335] = FALSE
f...........ANOUT 1 [354] =      0.00 %
f...........SOURCE TAG [273] =         7
f...........ANOUT 1 (C5) [34] =     0.000 VOLTS
f.........ANOUT 2 (F5)
f...........% TO GET 10V [275] =    150.00 %
f...........OFFSET [333] =      0.00 %
f...........HARDWARE OFFSET [677] =      0.00 %
f...........CALIBRATION [331] =    100.00 %
f...........MODULUS [336] = FALSE
f...........ANOUT 2 [355] =      0.00 %
f...........SOURCE TAG [276] =         9
f...........ANOUT 2 (F5) [35] =     0.000 VOLTS
```

BLOCK DIAGRAM

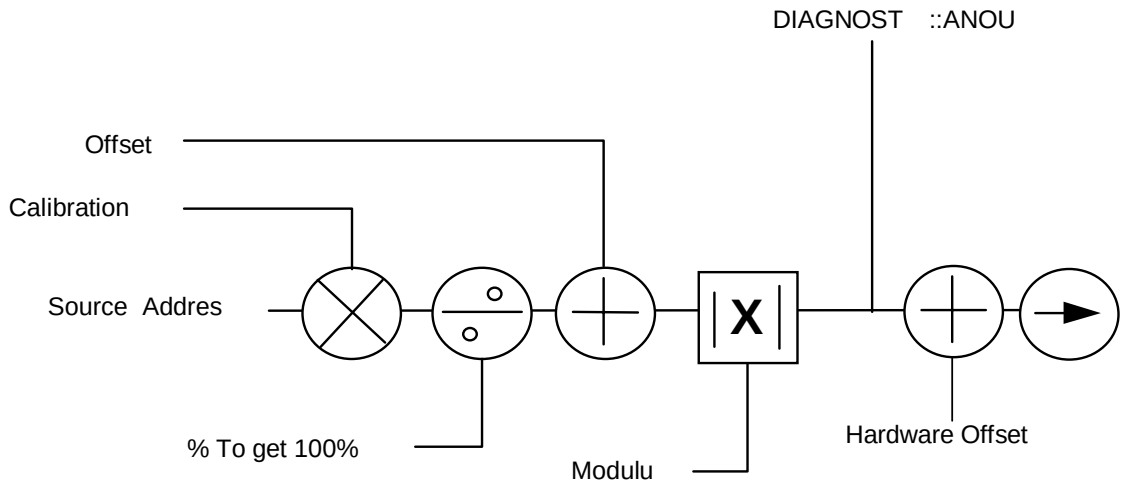

Figure 5.29 Analogue O/P Block Diagram

ANOUT 1 (C5) AND ANOUT 2 (F6)

% TO GET 10V	Scalar value which produces 10 V output.
OFFSET	Offset value added to the normal output value after the scalar and before the modulus.
CALIBRATION	Output scalar.
MODULUS	Unsigned analogue output enable.
SOURCE TAG N°	Source of output value.
ANOUT X	Diagnostic after scaling block if source tag is non zero else it could be used as a destination tag.
HARDWARE OFFSET	Offset value added to the final output value.

INPUTS

BLOCK DIAGRAM

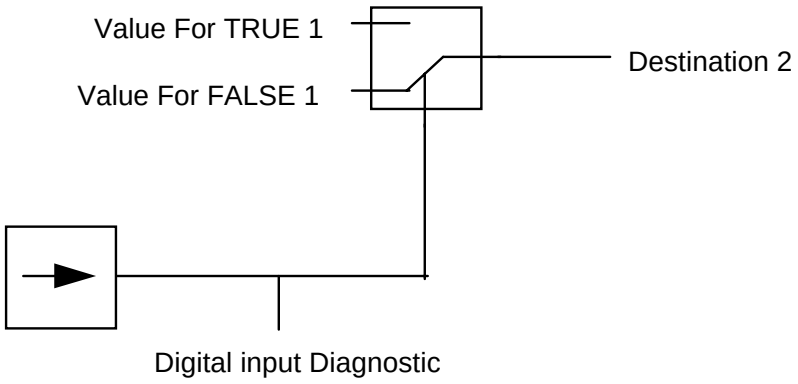

Figure 5.30 Digital Input Block Diagram

The Destination for a digital input can be any valid TAG N°; this means that a digital input can be used to select one of two values for a given parameter. It is also possible to treat the values for TRUE and FALSE as destination Tags from other functions or inputs.

MMI ENTRIES

```
f.......DIGITAL INPUTS
f........DIGIN 1 (E2)
f..........VALUE FOR TRUE   [279] = 0.01 %     *
f..........VALUE FOR FALSE  [280] = 0.00 %     *
f..........OUTPUT           [527] = 0.01 %     *
f..........DESTINATION TAG  [281] = 57       *
f........DIGIN 2 (E3)
f..........VALUE FOR TRUE   [283] = 0.01 %     *
f..........VALUE FOR FALSE  [284] = 0.00 %     *
f..........OUTPUT           [528] = 0.00 %     *
f..........DESTINATION TAG  [285] = 92       *
f........DIGIN 3 (E4)
f..........VALUE FOR TRUE   [287] = 0.01 %     *
f..........VALUE FOR FALSE  [288] = 0.00 %     *
f..........OUTPUT           [529] = 0.00 %     *
f..........DESTINATION TAG  [289] = 93       *
f........DIGIN 4 (E5)
f..........VALUE FOR TRUE   [523] = 0.01 %     *
f..........VALUE FOR FALSE  [524] = 0.00 %
f..........OUTPUT           [508] = 0.00 %
f..........DESTINATION TAG  [525] = 94
f..........DIGIN 4 (E5)     [521] = FALSE
f........DIGIN B6 DEST    [451] = 71
f........DIGIN B7 DEST    [450] = 70
f........DIGIN B8 DEST    [452] = 72
```

DIGIN 1 (E2), DIGIN 2 (E3), DIGIN 3 (E4), DIGIN 4 (E5)

VALUE FOR TRUE	Value that Destination TAG assumes when input is TRUE.7
VALUE FOR FALSE	Value that Destination TAG assumes when input is FALSE.
OUTPUT	Diagnostic.
DESTINATION TAG	Destination of assumed value.

DIGIN B6

DIGIN B6 DEST	Destination of digital input B6.(JOG by default) see also AUX IO

DIGIN B7

DIGIN B7 DEST	Destination of digital input B7.(START by default) see also AUX IO

DIGIN B8

DIGIN B8 DEST	Destination of digital input B8.(ENABLE by default) see also AUX IO

DIGITAL OUTPUTS

BLOCK DIAGRAM

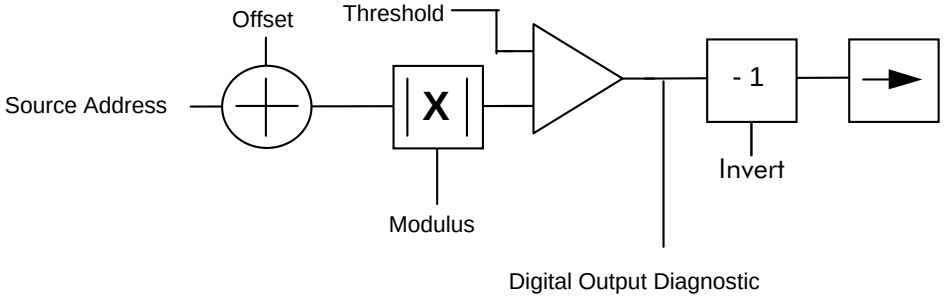

Figure 5.31 Digital Output

MMI ENTRIES

```
f.......DIGITAL OUTPUTS
f.........DIGOUT 1
f...........THRESHOLD (>)    [292] = 0.00 %
f...........INPUT            [324] = 0.01 %
f...........OFFSET           [321] = 0.00 %
f...........MODULUS          [293] = FALSE
f...........INVERT           [327] = FALSE
f...........SOURCE TAG       [294] = 17
f.........DIGOUT 2
f...........THRESHOLD (>)    [296] = 0.00 %
f...........INPUT            [325] = 0.01 %
f...........OFFSET           [322] = 0.00 %
f...........MODULUS          [297] = FALSE
f...........INVERT           [328] = FALSE
f...........SOURCE TAG       [298] = 12
f.........DIGOUT 3
f...........THRESHOLD (>)    [300] = 0.00 %
f...........INPUT            [326] = 0.00 %
f...........OFFSET           [323] = 0.00 %
f...........MODULUS          [301] = TRUE
f...........INVERT           [329] = FALSE
f...........SOURCE TAG       [302] = 559
```

DIGOUT 1 (E6), DIGOUT 2 (E7) AND DIGOUT 3 (E8)

THRESHOLD (>)	Threshold which the must exceed to set output TRUE.
INPUT	DIAGNOSTIC.
OFFSET	Offset.
MODULUS	Output set true for absolute or modulus of N° value.
INVERT	Select inverted output.
SOURCE TAG	Source TAG of used to set output.

CONFIGURE 5703

See also page 5-56 Setpoint Repeater 5703.

MMI ENTRIES

```
f.......CONFIGURE 5703
f.........SOURCE TAG       [304] = 176
f.........DESTINATION TAG  [305] = 371
```

BLOCK DIAGRAM

MMI ENTRIES

```
f.......BLOCK DIAGRAM
f.........RAISE/LOWER DEST [307] =         0
f.........RAMP O/P DEST [308] =       372
f.........PRESET DEST [111] =       373
f.........S-RAMP DEST [103] =         0
f.........HOME DEST [389] =         0
f.........SPT SUM1 OP DEST [345] =        58
f.........SPT SUM2 OP DEST [346] =       176
f.........SPT SUM3 OP DEST [347] =         0
f.........Pid O/P DEST [552] =         0
f.........Pid ERROR DEST [556] =       545
f.........POSITION DEST [341] =         0
f.........REF.SPEED DEST [656] =         0
f.........VALUE OP 1 DEST [697] =         0
f.........VALUE OP 2 DEST [704] =         0
f.........VALUE OP 3 DEST [711] =         0
f.........VALUE OP 4 DEST [718] =         0
f.........LOGIC OP 1 DEST [725] =         0
f.........LOGIC OP 2 DEST [732] =         0
f.........LOGIC OP 3 DEST [739] =         0
f.........LOGIC OP 4 DEST [746] =         0
```

INTERNAL LINKS

MMI ENTRIES

```
f.......INTERNAL LINKS
f.........LINK 1 SOURCE    [180] = 0
f.........LINK 1 DEST      [181] = 0
f.........LINK 2 SOURCE    [182] = 0
f.........LINK 2 DEST      [183] = 0
f.........LINK 3 SOURCE    [184] = 0
f.........LINK 3 DEST      [185] = 0
f.........LINK 4 SOURCE    [186] = 0
f.........LINK 4 DEST      [187] = 0
f.........LINK 5 SOURCE    [560] = 0
f.........LINK 5 DEST      [561] = 0
f.........LINK 6 SOURCE    [562] = 0
f.........LINK 6 DEST      [563] = 0
f.........LINK 7 SOURCE    [564] = 0
f.........LINK 7 DEST      [565] = 0
f.........LINK 8 SOURCE    [566] = 0
f.........LINK 8 DEST      [567] = 0
f.........LINK 9 SOURCE    [568] = 0
f.........LINK 9 DEST      [569] = 0
f.........LINK 10 SOURCE   [570] = 0
f.........LINK 10 DEST     [571] = 0
f.........LINK 11 SOURCE   [572] = 0
f.........LINK 11 DEST     [573] = 0
f.........LINK 12 SOURCE   [574] = 0
f.........LINK 12 DEST     [575] = 0
f.........LINK 13 SOURCE   [576] = 0
f.........LINK 13 DEST     [577] = 0
f.........LINK 14 SOURCE   [578] = 0
f.........LINK 14 DEST     [579] = 0
f.........LINK 15 SOURCE   [580] = 0
f.........LINK 15 DEST     [581] = 0
f.........LINK 16 SOURCE   [582] = 0
f.........LINK 16 DEST     [583] = 0
```

The internal links are an extension of the drive's reconfigurability. They allow two categories of connections:

1. Connect an internal output to an internal input directly, without having to come out to the drive terminals and then back in again. This would waste terminal allocation and suffer conversion inaccuracies from analogue to digital and vice-versa.
2. Connect a given input terminal to more than one destination, e.g. select a different value for "Ramp Accel Time" and "Ramp Decel Time" via the same digital input.

Data is copied from source tag to destination tag.

Chapter 6 Diagnostics and Fault Finding

INTRODUCTION

The 620 Vector Drive provides comprehensive diagnostic, alarm, and trip facilities. These facilities minimise the possibility of damage to the drive, motor and associated components under unusual or fault conditions. The diagnostics and alarm information, available at the MMI display, enable ready identification of conditions. In the event that a fault is traced to the drive, the drive should be returned to the manufacturer - no corrective maintenance should be attempted.

```
....DIAGNOSTICS      [5  ] =         0
......TOTAL SPD.DMD.   [6  ] =      0.00 %
h.....SPEED FB UNFIL   [7  ] =      0.00 %
......SPEED FEEDBACK   [11 ] =      0.00 %
......SPEED ERROR      [8  ] =      0.00 %
......TORQUE DEMAND    [9  ] =      0.00 %
......TORQUE FEEDBACK  [10 ] =      0.00 %
......CURRENT FEEDBACK [78 ] =      0.00 %
f.....TERMINAL VOLTS   [480] =         0 VOLTS
f.....DC LINK VOLTS    [613] =       599 VOLTS
f.....TERM V INTEGRAL  [623] =    100.00 %
......ACTUAL POS I LIM [13 ] =     11.96 %
......ACTUAL NEG I LIM [14 ] =    -11.96 %
......INVERSE TIME O/P [15 ] =     11.96 %
......AT CURRENT LIMIT [16 ] = FALSE
......AT ZERO SPEED    [17 ] = TRUE
......AT ZERO SETPOINT [18 ] = TRUE
......AT STANDSTILL    [19 ] = TRUE
......STALL TRIP       [20 ] = OK
......RAMPING          [21 ] = FALSE
......DRIVE START      [23 ] = FALSE
......DRIVE ENABLE     [24 ] = FALSE
......OPERATING MODE   [25 ] =  STOPPED
......HEALTHY          [27 ] = TRUE
......HEALTH OUTPUT    [12 ] = TRUE
......READY            [559] = FALSE
......RUN              [28 ] = FALSE
f.....CO-PRO PRESENT   [150] = TRUE
......ANIN 1 (C3)      [29 ] =     0.000 VOLTS
......ANIN 3 (F2)      [31 ] =     0.000 VOLTS
......ANIN 4 (F3)      [32 ] =     0.000 VOLTS
......ANIN 5 (F4)      [33 ] =     0.000 VOLTS
......ANOUT 1 (C5)     [34 ] =     0.000 VOLTS
......ANOUT 2 (F5)     [35 ] =     0.000 VOLTS
......COAST STOP       [26 ] = TRUE
......PROGRAM STOP     [22 ] = TRUE
......DIGIN B6 JOG     [37 ] = FALSE
......DIGIN B7 START   [36 ] = FALSE
......DIGIN B8 ENABLE  [38 ] = TRUE
......DIGIN 1 (E2)     [39 ] = TRUE
......DIGIN 2 (E3)     [40 ] = FALSE
......DIGIN 3 (E4)     [41 ] = FALSE
......DIGIN 4 (E5)     [521] = FALSE
......DIGOUT 1 (E6)    [42 ] = TRUE
......DIGOUT 2 (E7)    [43 ] = TRUE
......DIGOUT 3 (E8)    [44 ] = FALSE
......RAISE/LOWER O/P  [45 ] =      0.00 %
......SPT SUM O/P 1    [46 ] =      0.00 %
......SPT SUM O/P 2    [385] =      0.00 %
......SPT SUM O/P 3    [386] =      0.00 %
......RAMP OUTPUT      [47 ] =      0.00 %
......PRESET O/P       [110] =      0.00 %
......SPEED SETPOINT   [48 ] =      0.00 %
f.....SEQ RUN INPUT    [49 ] =      0.00 %
f.....SEQ OUTPUT       [50 ] =      0.00 %
......ENCODER          [51 ] =         0 RPM
```

6-2 Diagnostics and Fault Finding

The Diagnostics menu allows the user to monitor the operation of the drive. Diagnostics that can be monitored are described in the following paragraphs. These diagnostics are read-only.

TOTAL SPD.DMD.	Speed loop total setpoint after the ramp-to-zero block.
SPEED FB UNFIL	Raw speed feedback, usually used for analogue outputs.
SPEED FEEDBACK	Speed loop feedback.
SPEED ERROR	Speed loop error.
TORQUE DEMAND	Current loop demand (speed error PI output or external current demand clamped by all the current limits).
TORQUE FEEDBACK	Scaled and filtered torque.
CURRENT FEEDBACK	Scaled and filtered current.
TERMINAL VOLTS	Scaled motor output volts.
DC LINK VOLTS	DC link volts.
TERM V INTEGRAL	Output out motor volts compensation loop..
ACTUAL POS I LIM	Overall positive current limit value.
ACTUAL NEG I LIM	Overall negative current limit value.
INVERSE TIME O/P	Inverse time clamp output level.
AT CURRENT LIMIT	Current demand is being restrained by the overall current limit.
AT ZERO SPEED	At zero speed feedback.
AT ZERO SETPOINT	At zero speed demand.
AT STANDSTILL	"**AT ZERO SPEED**" and "**AT ZERO SETPOINT**".
STALL TRIP	Armature current is above "**STALL THRESHOLD**" and "**AT ZERO SPEED**" but **not** "**AT ZERO SETPOINT**".
RAMPING	If the difference between the ramp input and the ramp output is greater than the "**RAMP THRESHOLD**", then "**RAMPING**" is **TRUE**.
DRIVE START	Controller start / run command.
DRIVE ENABLE	Drive speed and current loop are enabled / quenched.
OPERATING MODE	Indicates whether the drive is in RUN, JOG 1....STOP etc.
HEALTHY	
HEALTH OUTPUT	
READY	
RUN	
CO-PRO PRESENT	Indicates that there is a co-processor fitted and working normally, only applicable to the 620L and 620Adv.

ANIN 1 (C3)	Diagnostic displaying the current state of the analogue input 1 (C3), by default this is connected to Speed setpoint no. 1.*
ANIN 2 (C4)	Diagnostic displaying the current state of the analogue input 2 (C4), by default this is connected to Direct speed setpoint no. 2 / current demand.
ANIN 3 (F2)	Diagnostic displaying the current state of the analogue input 3 (F2), by default this is connected to Speed setpoint no. 3 (ramped).*
ANIN 4 (F3)	Diagnostic displaying the current state of the analogue input 4 (F3), by default this is unconnected.
ANIN 5 (F4)	Diagnostic displaying the current state of the analogue input 5 (F4), by default this is unconnected.
ANOUT 1 (C5)	Diagnostic displaying the current state of the analogue output 1 (C5), by default this is connected to Speed feedback.*
ANOUT 2 (F5)	Diagnostic displaying the current state of the analogue output 2 (F5), by default this is connected to Torque demand. *
COAST STOP	
PROGRAM STOP	State of program stop (terminal B8). When B8 is at 24V then "**PROGRAM STOP**" is **FALSE**
START (B7)	Diagnostic displaying the current state of the start input 2 (B7), by default this is connected to Start terminal.
JOG INPUT (B6)	Diagnostic displaying the current state of the Jog input 2 (B6), by default this is connected to Jog Input terminal.
ENABLE (B8)	Diagnostic displaying the current state of the Enable input (B8), by default this is connected an Electronic Enable (ON = Enabled).
DIGIN 1 (E2)	Diagnostic displaying the current state of the digital input 1 (E2), by default this is connected to Ramp hold input (ON = Hold).*
DIGIN 2 (E3)	Diagnostic displaying the current state of the digital input 2 (E3), by default this is connected to Preset Select input 1. *
DIGIN 3 (E4)	Diagnostic displaying the current state of the digital input 3 (E4), by default this is connected to Preset Select input 2. *
DIGIN 4 (E5)	Diagnostic displaying the current state of the digital input 4 (E5), by default this is connected to Preset Select input 3. *
DIGOUT 1 (E6)	Diagnostic displaying the current state of the digital output 1 (E6), by default this is connected to At zero speed.
DIGOUT 2 (E7)	Diagnostic displaying the current state of the digital output 2 (E7), by default this is connected to Drive HEALTH. and is always ON when the start is low. This differs from Health as displayed on a front panel l.e.d. which remains of until health is reset by the drive being restarted.
DIGOUT 3 (E8)	Diagnostic displaying the current state of the digital output 3 (E8), by default this is connected to drive READY
RAISE/LOWER O/P	Value of the raise / lower ramp function.
PRESET O/P	**O**utput of Preset function block.
SPT SUM O/P 1	**O**utput of Setpoint Sum 1 function block.

SPT SUM O/P 2	Output of Setpoint Sum 2 function block.
SPT SUM O/P 3	Output of Setpoint Sum 3 function block.
RAMP OUTPUT	Output of Ramp function block.
SPEED SETPOINT	Speed loop total setpoint including the ramp output before the ramp-to-zero function. The ramp-to-zero function block is only used while during the stopping states, Normal Stop, Program Stop and Coast Stop.
ENCODER	Encoder speed feedback diagnostic in RPM.

Speed Feedback

There are two speed feedback diagnostics available in the DIAGNOSTICS menu:

ENCODER	This displays the speed setpoint in RPM.
SPEED FEEDBACK	This displays the speed setpoint as a percentage.

Alarm Status :: First Alarm, Alarm Status :: Health Store and Alarm Status :: Health Store.

First Alarm, Health Store and Health Word are displayed as 16bit hexadecimal status words where every bit has unique meaning described in the table below. These parameters are in the Alarms section of the MMI.

In Health Store and First Alarm only one bit is set at any one time, All active bits are set in Health Word immediately the alarm condition is detected.

HEALTH OVERSPEED	0x0001	Over Speed
HEALTH 2	0x0002	Reserved
HEALTH 4	0x0004	Reserved
HEALTH HEATSINK	0x0008	Fin Temp
HEALTH MOTOR TEMP	0x0010	Motor Temp
HEALTH OVER VOLTS	0x0020	Over Volts
HEALTH UNDER VOLTS	0x0040	Under Volts
HEALTH SPEED FEEDBACK	0x0080	The drive is no longer following speed feedback.
HEALTH POWER LOSS STOP	0x0100	The drive has stopped due to loss of supply
HEALTH STACK TRIP	0x0200	Gate drive shut down due to Over Current or Over Volts.
HEALTH AUTOTUNE	0x0400	Autotune Error
HEALTH 5703 RECEIVE	0x0800	P3 in slave mode is not receiving valid messages
HEALTH STALL TRIP	0x1000	The motor has stalled
HEALTH OVER CURRENT	0x2000	Over Current Trip
HEALTH EXTERNAL TRIP	0x4000	External Trip
HEALTH OTHER	0x8000	Other Alarms

NOTE:

Most Alarms may be disabled (inhibited) by setting the appropriate flags in the SET-UP PARAMETERS ::ALARMS

Alarm Error Codes

Calibration Error Messages

Error no.	Cause	Action
E000	Number of encoder lines too high.	Set the encoder lines to a sensible value.
E001	Number of encoder lines (or value of max speed) too small	Set encoder lines (or max speed) to a sensible value.
E002	Mag current greater than drive rating.	Set magnetising current to a sensible value.
E003	Mag current greater than motor current.	Set magnetising current to a sensible value.
E004	Current loop 'gain' parameter value too small value (i.e. actual gain is very large)	Set current loop 'gain' parameter to a sensible value.
E005	Motor rating is greater than 3 X Drive Rating.	Reduce motor rating.
E006	Max speed exceeds the allowable range, i.e. 5 times the nameplate rpm value.	Reduce max speed to less than or equal to 5 times the nameplate rpm value.
E007	Max speed X encoder lines exceeds the maximum encoder frequency of 250kHz (equivalent to 5000 lines, 3000 rpm)	Reduce max speed, or fit an encoder with fewer lines.
E009	Rotor time constant too small.	Set rotor time constant to a sensible value.
E010	Max speed is set to a value which is more than 30% higher than the value of 'max speed rpm' which existed when autotune was last carried out. Autotune gathers data on the motor up to 'max speed rpm' plus 30%, and no higher. Therefore any attempt to run the motor faster than this will degrade performance.	Either: 1. Reduce max speed to less than or equal to 'autocal max rpm' plus 30%. Note that 'autocal max rpm' is a parameter which may be found in the 'Autotune' menu under 'Set-up Parameters'. It records the value of 'max speed rpm', which existed when autotune was last carried out. Or 2. Re-run autotune with 'max speed rpm' set to a higher value.

Autotune Errors

Error no.	Cause	Action
D100	Drive was stopped in the middle of the Autotune process.	If necessary, re-run Autotune.
D101	Motor was unable to reach the required speed - timeout occurred.	Ensure that motor is able to spin freely. Alternatively, ensure that that the drive has been set up and is able to control the motor. See instructions for Autotune.
D102	Low mains. The supply voltage is not high enough to enable the autotune to be carried out.	Retry when the supply has recovered.
D103	Drive was not able to set up the magnetising current - timeout occurred.	Check motor data is correct, especially nameplate rpm and motor volts. Check also that the motor is correctly rated for the drive.
D104	Mag current greater than motor or drive rating.	As above.
D105	'Max Speed Rpm' is set to a value lower than the motor 'Nameplate Rpm'.	Set 'Max Speed Rpm' to a value greater than or equal to 'Nameplate Rpm'. This restriction will no longer apply after autotune has been completed.
D106	Mag current greater than drive rating.	The motor is too large for the drive.
D107	Mag current greater than motor current.	As error D103.
D108	Nameplate rpm set to a value greater than the base speed of the motor.	Set nameplate rpm to the correct value exactly as given on the nameplate.
D109	Calculated value of rotor time constant is too large. Probably due to an incorrect value of nameplate rpm.	As above.
D110	Calculated value of rotor time constant is too small. Probably due to an incorrect value of nameplate rpm.	As above.

Error no.	Cause	Action
F001	AUTOTUNE_ERROR	Autotune failed to complete.
F002	AUTOTUNE_ABORT	Autotune aborted by user.
F003	PRE_READY_FAULT	Fault in pre_ready state
F100	CAM_FULL_INIT	Internal software error
F200	CFG_INHIBIT	Config Enable high - Set to low and retry
F300	SEQ_STATE_MACHINE	Internal software error
F400	SYSTEM_TIME_FREEZE	Internal software error
F500	EEprom s/w error	Internal software error
FF04	TRAP_ISR	Internal software error
FF07	HSO_POLL_ERROR	Internal software error
FF10	STACK_OVERFLOW	Internal software error
FF20 FF21 FF22 FF23	CAM_FULL_SWT_1 CAM_FULL_SWT_2 CAM_FULL_SWT_3 CAM_FULL_SWT_4	Internal software error

ALARMS

If the drive trips then the display immediately shows a message indicating the reason for the trip. Removing and re-applying RUN resets alarm conditions. The alarm message can be cleared from the display by pressing the "E" key. Using the FIRST ALARM menu can redisplay it.

The possible alarm messages are:

LINK UNDERVOLTS

The DC link voltage is too low. Possible reasons for this alarm message are:
(a) The mains voltage is too low;
(b) The mains supply has been lost;
(c) One of the three phases of the supply is missing.

LINK OVERVOLTAGE

The DC link voltage is too high. Possible reasons for this alarm message are:
(a) The mains voltage is too high;
(b) Trying to decelerate a large inertia load too quickly.

LINK OVERCURRENT

The output current is too high. Possible reasons for this alarm message are:
(a) Short circuit between motor phases;
(b) Short circuit between motor phase and earth;
(c) Too long output cables or too many parallel motors;

HEATSINK TEMP

The drive heat-sink temperature is too high. Possible reasons for this alarm message are:
(a) The ambient air temperature is too high;
(b) A drive cooling fan has failed.;
(c) Poor ventilation.

MOTOR TEMP

The motor temperature is too high. Possible reasons for this alarm message are:
(a) Prolonged operation of the motor at low speed without forced cooling;
(b) Excessive load;
(c) Motor voltage rating incorrect; / Magnetising Current set too high.

MOTOR STALLED

The motor has stalled. Possible reasons for this alarm message are:
(a) Motor loading too great;
(b) **TORQUE LIMIT** parameter set too low;
(c) **STALL TRIP TIME** parameter too low;

EXTERNAL TRIP

A Tag that can optionally be connected to a digital input. The drive will trip if this is set high.

CONFIG ENABLE

The "Enable Configuration" flag has been left in the enable state. This needs to be disabled in order to run the drive.

CHECKSUM FAILED

Hardware error.

EE VERSION ERROR

Hardware error.

SPD.FBK.TRIP

The speed error is greater than the allowable threshold, this may be deliberate (the speed loop is saturated) in which case the alarm should be inhibited in the SET-UP PARAMETERS:ALARMS menu.

EEPROM ERROR

Hardware error. Or 620L or 620Adv has been reset to factory defaults.

Chapter 7 The European Directives and the 'CE' Mark

CEMEP

Until recently each European drives manufacturer and importer has been interpreting the EMC directive and ‘CE’ marking requirements differently. This has led to considerable confusion and frustration in the market place. To provide a unified approach, the European machines and drives manufactures, via their national trade associations have formed **the ‘European Committee of Manufacturers of Electrical Machines and Power Electronics’**, termed CEMEP. This committee has produced a document entitled “Recommendations for Application of Power Drive Systems (PDS), European Council Directives - CE Marking and Technical Standardisation”, which will be followed by all major European Drives manufacturer. A copy is available from your local trade association or from your local Eurotherm Drives office.

EMC DIRECTIVE

'CE' EMC Responsibility

The subject of CE marking and EMC is explored in more detail in a separate Eurotherm Application manual entitled ‘EMC Installation Guidelines for modules and systems’, part number HA388879, available from your local Eurotherm Drives office. The following sections are the minimum necessary for basic understanding.

Eurotherm Drives are adhering to the CEMEP recommendations on ‘CE’ marking for EMC. According to SI No. 2372, implementing the EMC directive into UK law, the requirement to CE mark for EMC, applies only to ‘**relevant apparatus**’ that has ‘**intrinsic function’** to the ‘**end user**’ and which is placed on the market (**supplied**). The majority of drive modules/systems sold by Eurotherm Drives will be incorporated into a higher system/apparatus or machine which includes (at least) the motor, cable and a driven load before providing ‘**intrinsic function**’ to the ‘**end user**’. As such the majority of Eurotherm Drives products are categorised as ‘**components**’ (CEMEP validity field 2) and it would be incorrect for Eurotherm Drives to apply the CE mark or produce an EC Declaration of Conformity in respect of EMC. It is the manufacturer/supplier/installer of the relevant apparatus (with the ‘**intrinsic function**’ to the ‘**end user**’) who must demonstrate conformance to the EMC directive

However, in a minority of cases, single drives may have ‘**intrinsic function**’ to the ‘**end user**’. An example is that of ‘**add on**’ ‘**intrinsic function**’, where an existing fixed speed motor application (such as a fan or a pump) is converted to variable speed with an ‘**add on**’ drive module (CEMEP validity field 1). In this application Eurotherm Drives CE mark its drive module and issue an EC declaration of conformity. Because the validity of the ‘CE’ mark for EMC is not known when the product is manufactured, the ‘CE’ mark will be applied via the product manual, and will not be on the product label. From 1997, when the ‘CE’ mark for the Low Voltage Directive becomes mandatory, the CE mark will appear on the product label, but its validity for EMC can only be identified from the product manual.

The validity of the ‘CE’ mark can be identified from the flowchart in figure 7.1, refer to SI No. 2372 for clarification of relevant apparatus.

To assist manufacturers/suppliers/installers of relevant apparatus, Eurotherms 620 Vector drive modules are EMC compliant to EN50081-1 (1992), EN50082-1 (1992), EN50081-2 (1994) and prEN50082-2 (1992), when fitted with the specified filter and installed according to these instructions, (as confirmed by the Manufacturers EMC declaration to be found at the end of this chapter).

Manufacturers/suppliers/installers of relevant apparatus (CEMEP validity fields 3 & 4) may use this compliance and manufacturers EMC declaration as a basis for their own justification of overall compliance with the EMC Directive.

It must be clearly understood by the customer before installation commences who is legally responsible for conformance with the EMC Directive. Misappropriation of the CE mark is a criminal offence.

Figure 7.1 Eurotherm EMC ‘CE’ Mark Validity Chart

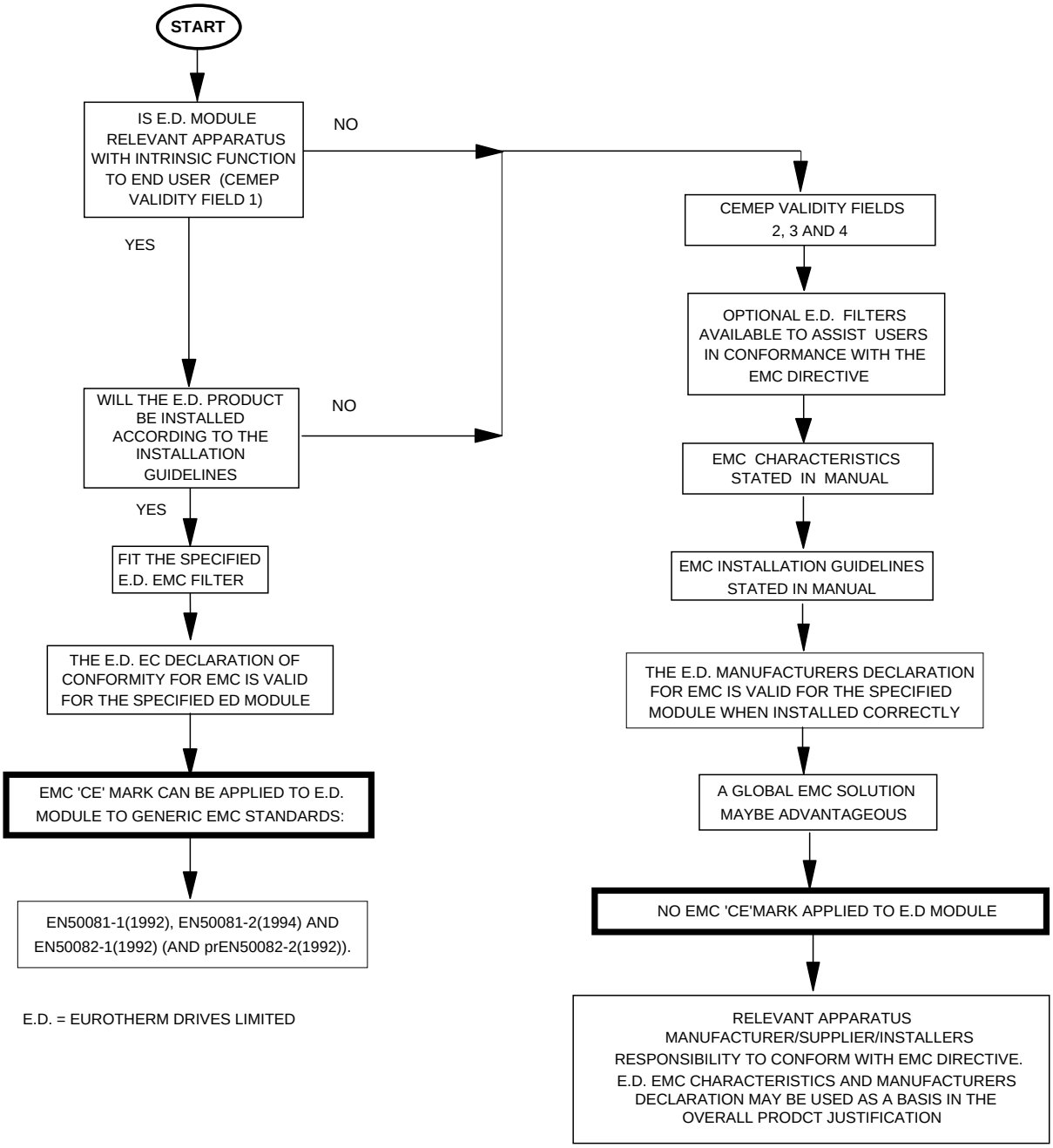

E.D. = EUROTHERM DRIVES LIMITED

Consideration of EMC Environment

When considering the relevant EMC emission and immunity standards it is important to distinguish between the following classes of EMC environments:

	Residential, supplied directly from public electricity supply		**Commercial and light industry, supplied directly from public electricity supply**		**Industrial installation with a separate transformer station**	
	RF emission	**Immunity**	**RF emission**	**Immunity**	**RF emission**	**Immunity**
Basic and Generic Standards	EN55011 (Class B) or EN50081-1(1992)	EN50082-1(1992) see below for referenced standards	EN55011 (Class B) or EN50081-1(1992)	EN50082-1(1992) see below for referenced standards	EN55011 (Class A) or EN50081-2(1994)	EN50082-2 (1992) see below for referenced standards
New EMC Product Standard (draft) for Power Drive Systems IEC-22G/31/FDIS+ (will become EN 61800-3)	Unrestricted distribution (CEMEP-1): < 25 A Class B > 25 A Class A Restricted distribution (CEMEP-2) Class A	see below ↓	EMC measures do not have to be implemented If interference in a neighbouring installation occurs, the operator is responsible for taking measures to prevent interference. In this case the required emission levels must be adhered to at the point of supply to the effected neighbouring installation.	see below ↓	EMC measures do not have to be implemented If interference in a neighbouring installation occurs, the operator is responsible for taking measures to prevent interference. In this case the required emission levels must be adhered to at the point of supply to the effected neighbouring installation.	see below ↓

+ This new Product Standard Draft has not yet been finally passed and more important, is not EC approved. An EC Declaration of Conformity for EMC can only be issued with the approval of a "Competent Body". It is anticipated this standard will be officially released during Q 3/4 1996.

* New standards to be introduced in the near future

Standards for immunity:
IEC801-2 (IEC1000-4-2*):
Electrostatic discharge (e.g. from electrostatically charged persons)

IEC801-3 (IEC1000-4-3/6*):
Electromagnetic fields (e.g. from portable telephones)

IEC801-4 (IEC1000-4-4*):
Fast electrical transients (burst) (e.g. from opening contacts in inductive circuits)

IEC801-5 (IEC1000-4-5):
Voltage surges (e.g. on local lightning strikes).

Fig. 7-2: EMC Emission and Immunity Standards applicable to 620 Vector drive modules and similar equipment

When using the generic EMC standards, the 'Residential, commercial and light industry' emission limits (Class B) are more stringent than the 'Industrial' (class A) limits, and so equipment which meets EN50081-1(1992) automatically meets EN50081-2(1994). Similarly, the 'Industrial' immunity requirements are more stringent than the 'Residential, commercial and light industry' requirements, and equipment which meets prEN50082-2(1992) automatically meets EN50082-1(1992).

More and more Product Specific standards are being released with less onerous EMC requirements than the Generic Standards. When the new EMC Drive Product Standard for Power Drive System (EN61800-3) becomes available (Q 3/4 1996), EMC filters will only be **mandatory** in 'residential' type EMC environments (if this is the most appropriate standard to use for demonstrating conformance of the relevant apparatus). EMC competent bodies are today using the draft EMC Drive Product Standard to demonstrate conformance using the technical construction file route. The EMC Drive Product Standard as CEMEP is discussed in more detail in the Eurotherm Application manual entitled 'EMC Installation Guidelines for modules and systems', part number HA388879, available from your local Eurotherm Drives office.

It is important for the customer to identify what EMC standards are to be applied to the final machine/system and in what EMC environment it will operate, so that any additional compliance costs can be minimised. It should be remembered that when two or more EMC compliant components are combined to form the final machine/system, the resulting machine/system may not be compliant. Emissions from combined components tend to be additive, whilst the immunity remains constant.

Filter Selection

620 Vector drive modules can be **'CE'** marked (as in CEMEP validity field 1) when used with the specified specially designed EMC filters to comply with the mains terminal limits of EN55011 Class B (or EN50081-1) as indicated previously, and when installed in accordance with the **EMC installation instructions** in this Product Manual (chapter 3). The Class B limit is the most stringent limit applied in Europe to date, and allows product to be used in either the 'residential, commercial and light industrial' or 'industrial' EMC environments. Refer to **Consideration of EMC environments**, in this chapter for more details. The specified EMC filters for the 620 Vector drive modules are summarised in table 3-3 in Chapter 3. The fitment of the specified EMC filter is **mandatory** where **'CE'** marking is applied.

If the customer is treating the 620 Vector drive module as a **component for supply to EMC competent professional assemblers** (CEMEP validity field 2)and is taking the EMC responsibility, then the filters are optional and may assist the customer in achieving EMC compliance. In this situation the customer may also achieve compliance by less expensive more global measures depending on the limits to be achieved, such as the use of a combination of global or local filtering and screening methods, natural mitigation through distance or use of distributed parasitic elements of the existing installation.

Filter Installation

The required EMC emission and immunity performance, and 'CE' marking of 620 Vector drive modules can only be achieved when the **EMC installation instructions** in Chapter 3 are adhered to.

Specification of Achievable EMC Emission and Immunity

620 Vector drive modules with the option to be **'CE'** marked meet the following EMC emission limits provided they are installed with the specified EMC filters for **'CE'** marking in accordance with the EMC installation instructions.

Port	Phenomenon	Basic standard	Level	Generic standard
Enclosure Port	radiated	EN55011 (1991)	Class B (cubicle mount)	EN50081-1 (1992)
			Class A (wall mount)	EN50081-2 (1994)
AC Power Port	conducted (with specified filter)	EN55011 (1991)	Class B #	EN50081-1 (1992)
AC Power Port	conducted (**no filter**)	EN55011 (1991)	130dBµV @ 150kHz* (common mode) 130dBµV @ 150kHz* (differential mode) Reducing with frequency by 20dB/decade	

* 6kHz switching frequency, 50 metres screened motor cable.

\# Up to 50 meter screened motor cable.

All 620 Vector drive modules meet the following EMC immunity performance criteria as defined in prEN50082-2 (1992) when installed and used as recommended.

Port	Phenomenon	Test Standard	Level	Acceptance Criterion	Generic Standard
Enclosure Port	ESD RF Field	IEC 801-2 IEC 801-3	4 kV CD, 8 kV AD 10 V/m, 1 kHz AM	self recovery no change	EN50082-1 (1992) Draft prEN50082-2 (1992)
Power Ports	Fast Transient Burst, Surge	IEC 801-4, IEC 801-5	2 kV 1 kV (P-P), 2 kV (P-E)	self recovery self recovery	
Signal & Control	Fast Transient Burst	IEC 801-4	2 kV	self recovery	
Power Interfaces	Fast Transient Burst	IEC 801-4	2 kV	self recovery	

The EMC filters for 620 Vector drive modules may be flash tested in circuit up to DC 2850 V for 1 min Ensure all other equipment that may be damaged by such flash testing has been suitably isolated/removed/short circuited as applicable. Due to the internal capacitors between phase and earth, the DC voltage should be wound up slowly, to prevent excessive earth current. For similar reasons AC flash testing cannot be performed due to the excessive earth leakage current. Repeated flash testing is not recommended as it may degrade the insulation.

EMC Responsibility of MANUFACTURERS/SUPPLIERS/INSTALLERS

For end users of 620 Vector drive modules, a correctly installed power drive system (PDS) created from the supplied 620 Vector drive will be compliant with the generic emission standards EN50081-1(1992) and EN50081-2(1994) and for immunity EN50082-1(1992) and prEN50082-2(1992) as previously indicated. Manufacturers/suppliers/installers of relevant apparatus may use this compliance as a basis for their own justification of overall compliance with the EMC Directive.

If it is the responsibility of the manufacturer/supplier/installer to establish EMC conformity and to 'CE' mark. There are three methods of demonstrating conformity:

1) Self certification to a relevant standard

2) Third party testing to a relevant standard

3) Writing a technical construction file stating the technical rationale as to why the relevant apparatus is compliant. An EMC "competent body" must then assess this and issue a technical report or certificate to demonstrate compliance.

Upon demonstrating EMC compliance an EC-Declaration of Conformity for the apparatus or machine may be issued and a **'CE'** mark applied.

Professional end users with EMC expertise who are using drive modules and cubicle systems defined as components who supply, place on the market or install the relevant apparatus must take responsibility for demonstrating EMC conformance and applying the 'CE' mark and issuing an EC Declaration of Conformity.

Eurotherm Guide

More information is available in a separate Eurotherm Guide entitled “Short Form Overview of European Directives for Variable Speed Drives and Applications” part number HA389770 available from your local Eurotherm Drives office.

CERTIFICATES

620 STD/COM/L
(T4/5/6/7)

EC DECLARATIONS OF CONFORMITY

Date CE marked first applied: 07.11.96

Issued for compliance with the EMC Directive when the unit is used as *relevant apparatus*.

EMC Directive

In accordance with the EEC Directive 89/336/EEC and amended by 92/31/EEC and 93/68/EEC, Article 10 and Annex 1, (EMC DIRECTIVE)
We Eurotherm Drives Limited, address as below, declare under our sole responsibility that the above Electronic Products when installed and operated with reference to the instructions in the Product Manual (provided with each piece of equipment) and using the specified EMC filters is in accordance with the relevant clauses from the following standards:- BSEN50081-1(1992), BSEN50081-2 (1994), BSEN50082-1# (1992)
and draft prEN50082-2#* (1992)

Low Voltage Directive

In accordance with the EEC Directive 73/23/EEC and amended by 93/68/EEC, Article 13 and Annex III, (LOW VOLTAGE DIRECTIVE)
We Eurotherm Drives Limited, address as below, declare under our sole responsibility that the above Electronic Products when installed and operated with reference to the instructions in the Product Manual (provided with each piece of equipment), is in accordance with the following standard :- EN50178 (1998)

The drive is CE marked in accordance with the low voltage directive for electrical equipment and appliances in the voltage range when installed correctly.

MANUFACTURERS DECLARATIONS

This is provided to aid your justification for EMC compliance when the unit is used as a component.

EMC Declaration

We Eurotherm Drives Limited, address as below, declare under our sole responsibility that the above Electronic Products when installed and operated with reference to the instructions in the Product Manual (provided with each piece of equipment) and using the specified EMC filters is in accordance with the relevant clauses from the following standards:- BSEN50081-1 (1992), BSEN50081-2 (1994), BSEN50082-1# (1992) and draft prEN50082-2#* (1992)

Machinery Directive

The above Electronic Products are components to be incorporated into machinery and may not be operated alone. The complete machinery or installation using this equipment may only be put into service when the safety considerations of the Directive 89/392/EEC are fully adhered to.
Particular reference should be made to EN60204-1 (Safety of Machinery - Electrical Equipment of Machines).
All instructions, warnings and safety information of the Product Manual must be adhered to.

Since the potential hazards are mainly electrical rather than mechanical, the drive does not fall under the machinery directive. However, we do supply a manufacturer's declaration for when the drive is used(as a component) in machinery.

Dr Martin Payn (Conformance Officer)

or information only.
 # Compliant with these immunity standards without specified EMC filters.

EUROTHERM DRIVES LIMITED An Invensys Company
NEW COURTWICK LANE, LITTLEHAMPTON, WEST SUSSEX BN17 7RZ
TELEPHONE: 01903 737000 FAX: 01903 737100
Registered Number: 1159876 England. Registered Office: Southdownview Way, Worthing, West Sussex BN14 8NN

File Name:P:\CE\SAFETY\PRODUCTS\620\LVD\PRODFILE\HK389950.919 © 1999 EUROTHERM DRIVES LIMITED

ISS:	DATE	DRN: MP CHKD:	DRAWING NUMBER: HK389950.919	
A	23.11.99	EUROTHERM DRIVES	TITLE: Declarations of Conformity	SHT 1 OF 1 SHTS

Chapter 8 Servicing

ROUTINE MAINTENANCE

Routine maintenance of the 620 Vector Drives comprises a periodic inspection to check for a build-up of dust or other obstructions that may affect the ventilation of the unit. Obstructions should be removed and any dust must be cleared using dry air.

REPAIR

The 620 Vector Drives must not be repaired by the user. If repair is necessary return the unit to Eurotherm Drives.

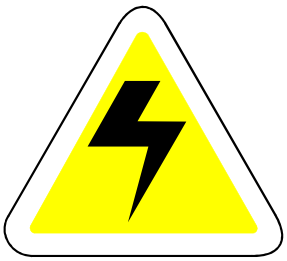

WARNINGS!

BEFORE DISCONNECTING THIS UNIT, ENSURE ISOLATION OF THE MAIN SUPPLY TO TERMINALS M1, M2 AND M3.

WAIT FOR AT LEAST 3 MINUTES FOR THE DC LINK TERMINALS (DC+ & DC-) TO DISCHARGE TO SAFE VOLTAGE LEVELS (<50V), FAILURE TO DO SO CONSTITUTES AN ELECTRICAL SHOCK HAZARD.

RETURNED MATERIAL

The following procedures are recommended in the unlikely event of a fault which necessitates return of a controller (or part) to Eurotherm Drives.

a) Contact your nearest Eurotherm Drives service centre to arrange return of the controller, if necessary. (Refer to the list of Eurotherm Drives service centres at the end of this Chapter). Eurotherm Drives will request the model number and serial number of the controller, please have this information to hand prior to making contact.

b) On contacting your local Eurotherm Drives service centre, a Returned Material Authorisation (RMA) code will be issued, if necessary, which must be used as a reference on paperwork returned with the controller.

c) Package and despatch the controller.

NOTE: In the unlikely event that a 620 is to be returned to Eurotherm Drives, it must be suitably packaged. If Styrofilä chips, or equivalent, are being used as a packing material then the controller must first be sealed in a polythene bag or similar, to prevent ingress of the packing material.

Disposal

This product contains materials which are consignable waste under the Special Waste Regulations 1996 which complies with the EC Hazardous Waste Directive - Directive 91/689/EEC.

We recommend you dispose of the appropriate materials in accordance with the valid environmental control laws. The following table shows which materials can be recycled and which have to be disposed of in a special way.

Material	Recycle	Disposal
metal	yes	no
plastics material	yes	no
printed circuit board	no	yes

The printed circuit board should be disposed of in one of two ways:

1. High temperature incineration (minimum temperature 1200°C) by an incinerator authorised under parts A or B of the Environmental Protection Act
2. Disposal in an engineered land fill site that is licensed to take aluminium electrolytic capacitors. Do not dispose of in a land fill site set aside for domestic waste.

Packaging

During transport our products are protected by suitable packaging. This is entirely environmentally compatible and should be taken for central disposal as secondary raw material.

Chapter 9 Appendices

APPENDIX A

Brake Motors

Brake motors are used in applications requiring a mechanical brake for safety or other operational reasons. The motor can be a standard induction motor fitted with an electromechanical brake or it could be a special conical rotor machine. In the case of a conical rotor machine the spring-loaded brake is controlled by the motor terminal voltage as follows:

a) At rest the motor is braked;

b) When the motor is energised an axial component of the magnetic field, due to the conical air-gap, overcomes the force of the brake spring and draws the rotor into the stator. This axial displacement releases the brake and allows the motor to accelerate like a normal induction motor;

c) When the motor is de-energised the magnetic field collapses and the brake spring displaces the rotor, pushing the brake disc against the braking surface.

d) Inverters can be used to control the speed of conical rotor brake motors since the drive maintains the motor magnetic field constant over the speed range. Note: These motors may be unsuitable for operation above base speed.

Using Line Chokes

Line chokes are not required to limit input current to Eurotherm Drives inverters. The purpose of these chokes is to reduce the ripple current in the DC Link capacitors. 620s up to 4kW do not require a choke. From 5.5kW upwards the choke is fitted inside the drive package.

Line chokes may be used to reduce the harmonic content of the supply current where this is particular requirement of the application.

Using Motor Chokes

Installations with motor cable runs in excess of 50m may suffer from nuisance overcurrent trips. This is due to the capacitance of the cable causing current spikes to be drawn from the Inverter output. A choke may be fitted in the Inverter output, which limits the capacitive current. Screened cable has a higher capacitance and may cause problems in shorter runs. The recommended choke values are shown in Table A.1.

Table A.1 - Recommended Choke Values For Cables Over 50m

Drive kW	Choke Inductance	RMS Current Rating	Eurotherm Part No.
0.75	2mH	7.5A	CO055931
1.1			
1.5			
2.2			
4.0	0.9mH	22A	CO057283
5.5			
7.5			
11	0.45mH	33A	CO057284
15			
18	0.3mH	44A	CO057285
22	50uH	70A	CO055193
30			
37	50uH	99A	CO055253

Using Multiple Motors on A Single Drive

It is not possible to use a single Inverter to supply several motors.

Current Loop Gain

Motors that are designed for high-speed operation at several times base speed will tend to have lower impedance. It may then be necessary to reduce the current loop gain.

In this case it is necessary to go into the 'test functions' menu. This is found under 'system/reserved'. Select test function 2. This will cause the software to generate a square wave current demand. The amplitude, period, and offset may be set by the parameters 'current amplitude', 'current period', and 'current offset' respectively. It is convenient best to set these numbers to 200, 40, and zero respectively.

Return to the 'current loop' menu under 'set-up parameters'. Select 'gain'. This is a number which may vary between 0 and 255. This number will typically be around 70 for most motors, but for higher speed motors it may need to be increased. **Note that to increase the gain, the number in 'GAIN' needs to be decreased.**

Turn on the drive and observe the actual current with an oscilloscope on the diagnostic test pin. See diagram 9.1 for the location of the two current feedback signals.

If the current loop gain is correct, or too low, the current feedback should follow the square wave current demand in a smooth controlled manner with no overshoot. When it has reached the new level it should settle down to a smooth waveform with a small amount of ripple.

As the gain is increased (i.e. the number in 'gain' is decreased) the current will follow the demand with less delay. As the gain is increased further (i.e. the number in 'gain' is decreased further) the point will be reached where the ripple (in the steady state when it has reached its new level) will suddenly increase. When this happens, the gain should be reduced until the ripple drops back to the low level.

The aim is to get the current to follow the demand with minimum delay, while ensuring the steady state ripple remains at a minimum.

Diagnostic Test Pins

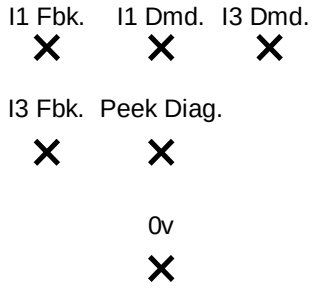

Figure 9.1

Diagnostic test point scaling.

Feedback: 100% = 1.59v peek
Demand: 220% = 5v peek (Centred on -5v)

Diagnostic test points:

These are of two types:

- Analogue current control diagnostics
- Peek memory location diagnostic

Current control diagnostics:

The current control loop has two channels, here called 1 and 3 (for historical reasons).

Each channel has a current feedback, a current demand, and a resulting current error. The current error is taken to a comparator, and a sawtooth waveform is taken to the other input of the comparator to produce the PWM waveform.

The current feedback is centred on zero, and scaled such that rated drive current gives 1.6v peak.

The current demand is centred on 5v, and is scaled such that rated drive current is 2.04v peak, i.e. 5v + or - 2.04v.

Peek memory location diagnostic (Peek Diag.):

This displays the 'peeked' value as an analogue output.

A Tag may be displayed by setting PEEK TAG to the desired Tag number. The default is speed feedback. The value can be scaled using PEEK SCALE.

An absolute memory location may be displayed by setting PEEK TAG to zero and selecting the memory location with PEEK DATA This function requires the supper password.

APPENDIX B - 620 MMI LISTING

```
VECTOR DRIVE
RELEASE 4.8
4.0 kW 380-460v
..MENU LEVEL
....DIAGNOSTICS
......TOTAL SPD.DMD. [6] =      0.00 %
h.....SPEED FB UNFIL [7] =      0.00 %
......SPEED FEEDBACK [11] =      0.00 %
......SPEED ERROR [8] =      0.00 %
......TORQUE DEMAND [9] =      0.00 %
......TORQUE FEEDBACK [10] =      0.00 %
......CURRENT FEEDBACK [78] =      0.00 %
f.....TERMINAL VOLTS [480] =         0 VOLTS
f.....DC LINK VOLTS [613] =       608 VOLTS
h.....DC VOLTS UNFLT [684] =       608 VOLTS
f.....TERM V INTEGRAL [623] =    100.00 %
......ACTUAL POS I LIM [13] =    100.00 %
......ACTUAL NEG I LIM [14] =    -100.00 %
......INVERSE TIME O/P [15] =    100.00 %
......AT CURRENT LIMIT [16] = FALSE
......AT ZERO SPEED [17] = TRUE
......AT ZERO SETPOINT [18] = TRUE
......AT STANDSTILL [19] = TRUE
......STALL TRIP [20] = OK
......RAMPING [21] = FALSE
......DRIVE START [23] = FALSE
......DRIVE ENABLE [24] = FALSE
......OPERATING MODE [25] =  STOPPED
......HEALTHY [27] = TRUE
......HEALTH OUTPUT [12] = TRUE
......READY [559] = FALSE
......RUN [28] = FALSE
......ANIN 1 (C3) [29] =     0.000 VOLTS
......ANIN 3 (F2) [31] =     0.000 VOLTS
......ANIN 4 (F3) [32] =     0.000 VOLTS
......ANIN 5 (F4) [33] =     0.000 VOLTS
......ANOUT 1 (C5) [34] =    0.000 VOLTS
......ANOUT 2 (F5) [35] =    0.000 VOLTS
......COAST STOP [26] = FALSE
......PROGRAM STOP [22] = FALSE
......DIGIN B6 JOG [37] = FALSE
......DIGIN B7 START [36] = FALSE
......DIGIN B8 ENABLE [38] = FALSE
......DIGIN 1 (E2) [39] = FALSE
......DIGIN 2 (E3) [40] = FALSE
......DIGIN 3 (E4) [41] = FALSE
......DIGIN 4 (E5) [521] = FALSE
......DIGOUT 1 (E6) [42] = TRUE
......DIGOUT 2 (E7) [43] = TRUE
......DIGOUT 3 (E8) [44] = FALSE
......RAISE/LOWER O/P [45] =      0.00 %
......SPT SUM O/P 1 [46] =      0.00 %
......SPT SUM O/P 2 [385] =      0.00 %
......SPT SUM O/P 3 [386] =      0.00 %
......RAMP OUTPUT [47] =      0.00 %
......PRESET O/P [110] =      0.00 %
......SPEED SETPOINT [48] =      0.00 %
f.....SEQ RUN INPUT [49] =      0.00 %
f.....SEQ OUTPUT [50] =      0.00 %
......ENCODER [51] =         0 RPM
....SETUP PARAMETERS
......RAMPS
........RAMP ACCEL TIME [54] =      10.0 SECS
........RAMP DECEL TIME [55] =      10.0 SECS
f.......RAMP QUENCH [56] = FALSE
........RAMP HOLD [57] = FALSE <- [281]
........RAMP INPUT [58] =      0.00 % <- [345]
........% S-RAMP [59] =      0.00 %
........RAMPING THRESH. [60] =      1.00 %
........AUTO RESET [61] = TRUE
........EXTERNAL RESET [62] = FALSE
........RESET VALUE [63] =      0.00 %
........RAMPING [21] = FALSE
........RAMP OUTPUT [47] =      0.00 %
......OP-STATION
........SET UP
..........SETPOINT [507] =       0.0 %
..........LOCAL KEY ENABLE [632] = TRUE
........START UP VALUES
..........SETPOINT [503] =       0.0 %
..........REV DIRECTION [504] = FALSE
..........PROGRAM [505] = FALSE
..........LOCAL [506] = FALSE
........LOCAL RAMP
..........RAMP ACCEL TIME [511] =      10.0 SECS
..........RAMP DECEL TIME [512] =      10.0 SECS
..........% S-RAMP [516] =      0.00 %
h.........RAMP OUTPUT [509] =      0.00 %
......AUX I/O
........AUX START [66] = TRUE
........START [70] = FALSE <- [450]
........AUX JOG [67] = TRUE
........JOG INPUT [71] = FALSE <- [451]
........AUX ENABLE [68] = TRUE
........ENABLE [72] = FALSE <- [452]
f.......REM.SEQ.ENABLE [791] = FALSE
f.......REMOTE SEQ [786] =  0x0000
f.......SEQ STATUS [787] =  0x0C04
......JOG
........JOG SPEED 1 [75] =     10.00 %
........JOG SPEED 2 [76] =    -10.00 %
........MODE [80] = FALSE
........JOG ACCEL RATE [113] =      10.0 SECS
........JOG DECEL RATE [114] =      10.0 SECS
......RAISE/LOWER
........RESET VALUE [82] =      0.00 %
........RAMP RATE [83] =      60.0 SECS
........RAISE INPUT [85] = FALSE
........LOWER INPUT [86] = FALSE
........MIN VALUE [87] =   -100.00 %
........MAX VALUE [88] =    100.00 %
........EXTERNAL RESET [89] = FALSE
........RAISE/LOWER O/P [45] =      0.00 %
h.......RAISE/LOWER INIT [678] =      0.00 %
h.....INVERSE TIME
h.......AIMING POINT [116] =    105.00 %
h.......DELAY [117] =      60.0 SECS
h.......DOWN RATE [118] =      10.0 SECS
h.......UP RATE [148] =     120.0 SECS
h.......INVERSE TIME O/P [15] =     31.44 %
......STOP RATES
........RUN STOP TIME [120] =      10.0 SECS
........RUN STOP LIMIT [121] =      60.0 SECS
........FAST STOP TIME [123] =       1.0 SECS
........FAST STOP LIMIT [124] =      60.0 SECS
........USE SYSTEM RAMP [125] = TRUE
f.......PRE-START DELAY [122] =     0.500 SECS
f.......READY DELAY [352] =     0.000 SECS
........CONTACTOR DELAY [112] =       0.5 SECS
........PILOT 590 MODE [777] = FALSE
........STOP ZERO SPEED [126] =      1.00 %
........PROG STOP I-LIM [622] =    150.00 %
........COAST STOP [26] = FALSE
........PROGRAM STOP [22] = FALSE
......ALARMS / SEQ
........EXTERNAL TRIP [144] = FALSE
f.......REMOTE INHIBIT [788] = FALSE
f.......REMOTE DELAY [790] =      1.00
........REMOTE TRIP [789] = OK
h.......MOTOR TMP.TRIP [128] =     75.00 %
h.......MOTOR TMP.RST. [309] =     50.00 %
........MOTR.TMP.INHIBIT [146] = FALSE
h.......HEATSINK LEVEL [129] =     17.00 %
f.......ACK ALARM [166] = TRUE
........STALL INHIBIT [143] = FALSE
........STALL TORQUE [136] =     95.00 %
........STALL SPEED [138] =      4.00 %
........STALL DELAY [137] =     10.00
........STALL TRIP [20] = OK
........OVER SPD INHIBIT [145] = FALSE
........OVER SPEED LEVEL [139] =    120.00 %
h.......UNDER V LEVEL [685] =       440 VOLTS
h...../UNDER VOLTS [686] = TRUE
........5703 RCV.INHIBIT [142] = FALSE
f.......SPD.FBK.DELAY [687] =    10.000 SECS
f.......SPD.FBK.THRESHD [688] =     10.00 %
........SPD.FBK.INHIBIT [689] = FALSE
h.......HEALTH INHIBIT [219] =  0x0000
f.......OPERATING MODE [25] =  STOPPED
f.......DRIVE START [23] = FALSE
f.......DRIVE ENABLE [24] = FALSE
f.......READY [559] = FALSE
f.......RUN [28] = FALSE
f.......HEALTH STORE [203] =  0x0000
f.......HEALTH WORD [217] =  0x0010
f.......FIRST ALARM [218] =  0x0010
f.......HEALTHY [27] = TRUE
f.......HEALTH OUTPUT [12] = TRUE
......CALIBRATION
........ENCODER LINES [131] =      2048
........ENCODER SUPPLY [774] =        50 %
```

```
........MAX SPEED RPM [130] =      1500 RPM
........BASE FREQUENCY [448] =      50.0 Hz
........MOTOR VOLTS [486] =       415 VOLTS
........MOTOR RATING RMS [134] =       1.0 AMPS
........NO.OF POLES [399] =         4
........NAMEPLATE RPM [135] =      1440 RPM
......TORQUE LOOP
........MAG CURRENT % [453] =     30.00 %
........ROTOR TIME CONST [458] =     100.0 mSECS
........TORQ.DMD.ISOLATE [596] = FALSE
........AUX TORQUE DMD [599] =      0.00 %
........ADVANCED
..........1 / GAIN [149] =        70
f.........ROTOR TEMP [769] =    100.00 %
f.........Tr COMP (COLD) [770] =     80.00 %
f.........Tr COMP [784] =    100.00 %
........TORQUE LIMITS
..........POS TORQUE LIMIT [157] =    150.00 %
..........NEG TORQUE LIMIT [158] =   -150.00 %
..........MAIN TORQUE LIM. [159] =    100.00 %
..........SYMMETRIC TQ.LIM. [153] = TRUE
..........ACTUAL POS I LIM [13] =    100.00 %
..........ACTUAL NEG I LIM [14] =    -100.00 %
..........CURRENT LIMIT [585] =    150.00 %
..........AT CURRENT LIMIT [16] = FALSE
........CURRENT FEEDBACK [78] =      0.00 %
f.......TERMINAL VOLTS [480] =         0 VOLTS
f.......DC LINK VOLTS [613] =       608 VOLTS
h.......DC VOLTS UNFLT [684] =       608 VOLTS
........TORQUE DEMAND [9] =      0.00 %
........TORQUE FEEDBACK [10] =      0.00 %
......SPEED LOOP
........SPD. PROP. GAIN [161] =     10.00
........SPD. INT. TIME [162] =       100 mSECS
f.......INT. DEFEAT [163] = FALSE
........ENCODER SIGN [164] = POS
f.......ADVANCED
f.........SPEED FBK FILTER [673] =     0.500
f.........SPEED DMD FILTER [662] =     0.750
f.........ADAPTIVE THRESH [674] =      0.00 %
f.........ADAPTIVE P-GAIN [675] =     10.00
f.........PWR LOSS CNTRL
f...........ENABLE [639] = FALSE
f...........TRIP THRESHOLD [640] =         0 VOLTS
f...........CONTROL BAND [657] =        20 VOLTS
f...........DECEL RATE [641] =      2.50 %
f...........ACCEL RATE [644] =      0.50 %
f...........TIME LIMIT [643] =    30.000 SECS
f...........PWR LOSS ACTIVE [766] = FALSE
........SPEED SETPOINTS
..........DIRECT SPT1 [171] =      0.00 %
..........DIRECT RATIO [172] =    0.1000
..........DIRECT SPT. MAX [173] =    100.00 %
..........DIRECT SPT. MIN [174] =   -100.00 %
..........DIRECT ENABLE [175] = FALSE
..........MAIN SPD.SPT. [176] =      0.00 % <- [346]
..........MAX SPEED [177] =    100.00 %
..........MIN SPEED [178] =   -100.00 %
h.........SEQ RUN INPUT [49] =      0.00 %
h.........SEQ OUTPUT [50] =      0.00 %
f.......ZERO SPEED
..........ZERO SPD HYST [132] =      0.10 %
..........ZERO SPEED LEVEL [252] =      0.50 %
..........AT ZERO SPEED [17] = TRUE
..........AT ZERO SETPOINT [18] = TRUE
..........AT STANDSTILL [19] = TRUE
f.......TEST MODE
f.........ENABLE [647] = FALSE
f.........SPEED SETPOINT 1 [648] =      5.00 %
f.........SPEED SETPOINT 2 [649] =     10.00 %
f.........PERIOD [650] =      1000 mSECS
........TOTAL SPD.DMD. [6] =      0.00 %
h.......SPEED FB UNFIL [7] =      0.00 %
........SPEED FEEDBACK [11] =      0.00 %
........SPEED ERROR [8] =      0.00 %
........ENCODER [51] =         0 RPM
........SPEED SETPOINT [48] =      0.00 %
......AUTOTUNE
........AUTOTUNE FLAG [482] = FALSE
........MAG I AUTOTUNE [483] = TRUE
........SET Tr < RTD SPD [484] = TRUE
........AUTOCAL MAX RPM [629] =     30000 RPM
......SETPOINT SUM 1
........RATIO 0 [189] =    1.0000
........RATIO 1 [190] =    1.0000
........SIGN 0 [191] = POS
........SIGN 1 [192] = POS
........DIVIDER 0 [193] =    1.0000
........DIVIDER 1 [194] =    1.0000
........LIMIT [195] =    100.00 %
........INPUT 0 [196] =      0.00 % <- [251]
........INPUT 1 [197] =      0.00 % <- [259]
........INPUT 2 [198] =      0.00 %
........SPT SUM O/P 1 [46] =      0.00 %
......SETPOINT SUM 2
........RATIO 1 [365] =    1.0000
........RATIO 0 [364] =    1.0000
........SIGN 1 [367] = POS
........SIGN 0 [366] = POS
........DIVIDER 1 [369] =    1.0000
........DIVIDER 0 [368] =    1.0000
........LIMIT [370] =    100.00 %
........INPUT 0 [371] =      0.00 % <- [305]
........INPUT 1 [372] =      0.00 % <- [308]
........INPUT 2 [373] =      0.00 % <- [111]
........SPT SUM O/P 2 [385] =      0.00 %
......SETPOINT SUM 3
........RATIO 1 [376] =    1.0000
........RATIO 0 [375] =    1.0000
........SIGN 1 [378] = POS
........SIGN 0 [377] = POS
........DIVIDER 1 [380] =    1.0000
........DIVIDER 0 [379] =    1.0000
........LIMIT [381] =    100.00 %
........INPUT 0 [382] =      0.00 %
........INPUT 1 [383] =      0.00 %
........INPUT 2 [384] =      0.00 %
........SPT SUM O/P 3 [386] =      0.00 %
f.....REF ENCODER
f.......PHASE
f.........RESET [600] = FALSE
f.........POS CALC ENABLE [337] = FALSE
h.........RESET FBK POS [797] = FALSE
h.........FEEDBACK POS [775] =  0x0000
f.........OFFSET MENU
f...........OFFSET [447] =         0
f...........OFFSET SCALE [609] =         1
f...........OFFSET TRIM [670] =         0
f.........TEST MODE
f...........ENABLE [652] = FALSE
f...........OFFSET 1 [653] =       500
f...........OFFSET 2 [654] =      1000
f...........PERIOD [655] =      1000 mSECS
f.........MAX POSITION ERR [342] =    100.00
f.........SATURATED [610] = FALSE
f.........OVERFLOW [611] = FALSE
f.........POSITION ERROR [338] =         0
f.......INPUT SCALING
f.........FBK.SCALE A [498] =     10000
f.........FBK.SCALE B [499] =     10000
h.........FBK ENCODER CNT [77] =         0
f.......LENGTH MENU
f.........LENGTH [765] =         0
f.........LENGTH SCALE [762] =         1
f.........LENGTH RATE [764] =     100.0
f.........SUBTRACT LENGTH [763] = FALSE
f.......INCH MENU
f.........INCH ADVANCE [604] = FALSE
f.........INCH RETARD [605] = FALSE
f.........INCH RATE [606] =      10.0
f.......CALC.REF.POSTION
f.........ENABLE [659] = FALSE
f.........INPUT [660] =      0.00 %
f.........OUTPUT [661] =         0
f.....PID
f.......INPUT [545] =      0.00 % <- [556]
f.......ENABLE [534] = TRUE
f.......PROP.GAIN [549] =       1.0
f.......INT.TIME CONST. [539] =      5.00 SECS
f.......INT.DEFEAT [538] = FALSE
f.......DERIVATIVE TC [531] =     0.000 SECS
f.......FILTER TC [535] =     0.100 SECS
f.......POSITIVE LIMIT [547] =    100.00 %
f.......NEGATIVE LIMIT [542] =   -100.00 %
f.......O/P SCALER(TRIM) [543] =    1.0000
f.......ERROR CALC
f.........INPUT 1 [536] =      0.00 %
f.........INPUT 2 [537] =      0.00 %
f.........RATIO 1 [550] =    1.0000
f.........RATIO 2 [551] =    1.0000
f.........SIGN 1 [601] = POS
f.........SIGN 2 [602] = POS
f.........DIVIDER 1 [532] =    1.0000
f.........DIVIDER 2 [533] =    1.0000
```

```
f.........LIMIT [553] =    100.00 %
f.........ERROR O/P [500] =      0.00 %
f.......PROFILER
f.........MODE [541] =         0
f.........MIN PROFILE GAIN [540] =     20.00 %
f.........PROFILED GAIN [548] =       0.0
f.........PROFILE INPUT [554] =      0.00 %
f.........PROFILE MININPUT [555] =      0.00 %
f.......OUTPUT [546] =      0.00 %
f.......CLAMPED [544] = TRUE
......PRESET
........SELECT 1 [92] = FALSE <- [285]
........SELECT 2 [93] = FALSE <- [289]
........SELECT 3 [94] = FALSE <- [525]
........INVERT O/P [109] = FALSE
........INPUT 1 [95] =      0.00 %
........INPUT 2 [96] =     25.00 %
........INPUT 3 [97] =     50.00 %
........INPUT 4 [98] =    100.00 %
........INPUT 5 [99] =      0.00 %
........INPUT 6 [100] =    -25.00 %
........INPUT 7 [101] =    -50.00 %
........INPUT 8 [102] =   -100.00 %
........PRESET O/P [110] =      0.00 %
f.....S-RAMP
f.......INPUT [597] =      0.00 %
f.......SYMMETRIC [667] = TRUE
f.......ACCELERATION [106] =     10.00
f.......DECELERATION [666] =     10.00
f.......JERK 1 [107] =     10.00
f.......JERK 2 [663] =     10.00
f.......JERK 3 [664] =     10.00
f.......JERK 4 [665] =     10.00
f.......AUTO RESET [669] = TRUE
f.......EXTERNAL RESET [104] = FALSE
f.......RESET VALUE [105] =      0.00 %
f.......QUENCH [108] = FALSE
f.......AT SPEED [316] = FALSE
f.......AT SPEED LEVEL [612] =      1.00 %
h.......ACCEL O/P [253] =      0.00
h.......OVERSHOOT THRESH [254] =      5.00 %
h.......ERROR THRESHOLD [668] =      0.50 %
f.......OUTPUT [598] =      0.00 %
f.....HOME
f.......HOME [397] = FALSE
f.......HOMING DISTANCE [396] =      2048
f.......1/ENCODER SCALE [398] =      4.00
f.......LINEAR  O/P [388] = FALSE
f.......OVERSHOOT LIMIT [773] =      1.00 %
f.......HOME INPUT [394] =      0.00 %
f.......HOME OUTPUT [395] =      0.00 %
f.....OPERATORS
f.......VALUE OPERATOR 1
f.........INPUT A [692] =      0.00 %
f.........INPUT B [693] =      0.00 %
f.........INPUT C [694] =      0.00 %
f.........TYPE [695] = IF(C) -A
f.........OUTPUT [696] =      0.00 %
f.......VALUE OPERATOR 2
f.........INPUT A [699] =      0.00 %
f.........INPUT B [700] =      0.00 %
f.........INPUT C [701] =      0.00 %
f.........TYPE [702] = IF(C) -A
f.........OUTPUT [703] =      0.00 %
f.......VALUE OPERATOR 3
f.........INPUT A [706] =      0.00 %
f.........INPUT B [707] =      0.00 %
f.........INPUT C [708] =      0.00 %
f.........TYPE [709] = IF(C) -A
f.........OUTPUT [710] =      0.00 %
f.......VALUE OPERATOR 4
f.........INPUT A [713] =      0.00 %
f.........INPUT B [714] =      0.00 %
f.........INPUT C [715] =      0.00 %
f.........TYPE [716] = IF(C) -A
f.........OUTPUT [717] =      0.00 %
f.......LOGIC OPERATOR 1
f.........INPUT A [720] = FALSE
f.........INPUT B [721] = FALSE
f.........INPUT C [722] = FALSE
f.........TYPE [723] = NOT(A)
f.........OUTPUT [724] = TRUE
f.......LOGIC OPERATOR 2
f.........INPUT A [727] = FALSE
f.........INPUT B [728] = FALSE
f.........INPUT C [729] = FALSE
f.........TYPE [730] = NOT(A)
f.........OUTPUT [731] = TRUE
f.......LOGIC OPERATOR 3
f.........INPUT A [734] = FALSE
f.........INPUT B [735] = FALSE
f.........INPUT C [736] = FALSE
f.........TYPE [737] = NOT(A)
f.........OUTPUT [738] = TRUE
f.......LOGIC OPERATOR 4
f.........INPUT A [741] = FALSE
f.........INPUT B [742] = FALSE
f.........INPUT C [743] = FALSE
f.........TYPE [744] = NOT(A)
f.........OUTPUT [745] = TRUE
....PASSWORD
......ENTER PASSWORD [200] =  0x0000
......CHANGE PASSWORD [201] =  0x0000
h.....BYPASS PASSWORD [69] = FALSE
....ALARM STATUS
......HEALTH STORE [203] =  0x0000
......HEALTH WORD [217] =  0x0010
......FIRST ALARM [218] =  0x0010
h.....HEALTH INHIBIT [219] =  0x0000
....MENUS
......FULL MENUS [205] = TRUE
f.....MENU DELAY [206] =         0
f.....DATA DELAY [207] =       100
h.....MIN MMI CYCLE TM [313] =       200
h.....MAX MMI CYCLE TM [314] =      4000
....SERIAL LINKS
......PORT P3
........P3 MODE [237] = EI BUSY*
........P3 BAUD RATE [241] = 9600
........DUMP MMI (TX) [238] = UP TO ACTION
h.......MEMORY DUMP [221] = FALSE
........UDP XFER (TX) [240] = UP TO ACTION
........UDP XFER (RX) [239] = UP TO ACTION
........ERROR REPORT [229] =  0x0000
h.......LINE ERROR CNT [798] =  0x0000
h.......P3 TAG LIST
h.........TAG 1 [212] =         7
h.........P3 TAG LIST TC [318] =      0.10 SECS
......EI ASCII
........GROUP ID (GID) [223] =         0
........UNIT ID (UID) [224] =         0
f.......OPTION ADDRESS [230] =         0
f.......OPTION VERSION [672] =      0.00
f.....5703 SUPPORT
f.......SETPT. RATIO [233] =    1.0000
f.......INVERT SETPOINT [234] = FALSE
f.......SCALED INPUT [235] =      0.00 %
f.......RAW INPUT [584] =      0.00 %
f.......OUTPUT [236] =      0.00 %
....SYSTEM
......SOFTWARE INFO
........620 VERSION [782] = 12:21:39
f.......P1 VERSION [226] = NOT PRESENT
f.......CO-PRO PRESENT [150] = FALSE
f.......CO-PRO TYPE [781] =         0
f.......DRIVE RATING RMS [133] =       9.4 AMPS
f.......MID VOLTS [151] = TRUE
f.......CHASSIS TYPE [152] =         4
f.......60Hz DEFAULTS [785] = FALSE
f.....CONFIGURE I/O
f.......CONFIGURE ENABLE [245] = FALSE
f.......ANALOG INPUTS
f.........ANIN 1 (C3)
f..........CALIBRATION [248] =    100.00 %
f..........OFFSET [358] =      0.00 %
f..........MAX VALUE [249] =    100.00 %
f..........MIN VALUE [250] =   -100.00 %
f..........DESTINATION TAG [251] =       196
f..........SCALED INPUT [390] =      0.00 %
f..........ANIN 1 (C3) [29] =     0.000 VOLTS
f.........ANIN 3 (F2)
f..........CALIBRATION [256] =    100.00 %
f..........OFFSET [360] =      0.00 %
f..........MAX VALUE [257] =    100.00 %
f..........MIN VALUE [258] =   -100.00 %
f..........DESTINATION TAG [259] =       197
f..........SCALED INPUT [391] =      0.00 %
f..........ANIN 3 (F2) [31] =     0.000 VOLTS
f.........ANIN 4 (F3)
f..........CALIBRATION [261] =    100.00 %
f..........OFFSET [361] =      0.00 %
f..........MAX VALUE [262] =    100.00 %
f..........MIN VALUE [263] =   -100.00 %
f..........DESTINATION TAG [264] =         0
```

```
f...........SCALED INPUT [392] =      0.00 %
f...........ANIN 4 (F3) [32] =     0.000 VOLTS
f.........ANIN 5 (F4)
f...........CALIBRATION [266] =    100.00 %
f...........OFFSET [362] =      0.00 %
f...........MAX VALUE [267] =    100.00 %
f...........MIN VALUE [268] =   -100.00 %
f...........DESTINATION TAG [269] =         0
f...........SCALED INPUT [393] =      0.00 %
f...........ANIN 5 (F4) [33] =     0.000 VOLTS
h.........ANIN FILTER [671] =     0.800
f.......ANALOG OUTPUTS
f.........ANOUT 1 (C5)
f...........% TO GET 10V [272] =    100.00 %
f...........OFFSET [332] =      0.00 %
f...........HARDWARE OFFSET [676] =      0.00 %
f...........CALIBRATION [330] =    100.00 %
f...........MODULUS [335] = FALSE
f...........ANOUT 1 [354] =      0.00 %
f...........SOURCE TAG [273] =         7
f...........ANOUT 1 (C5) [34] =     0.000 VOLTS
f.........ANOUT 2 (F5)
f...........% TO GET 10V [275] =    150.00 %
f...........OFFSET [333] =      0.00 %
f...........HARDWARE OFFSET [677] =      0.00 %
f...........CALIBRATION [331] =    100.00 %
f...........MODULUS [336] = FALSE
f...........ANOUT 2 [355] =      0.00 %
f...........SOURCE TAG [276] =         9
f...........ANOUT 2 (F5) [35] =    0.000 VOLTS
f.......DIGITAL INPUTS
f.........DIGIN 1 (E2)
f...........VALUE FOR TRUE [279] =      0.01 %
f...........VALUE FOR FALSE [280] =      0.00 %
f...........OUTPUT [527] =      0.00 %
f...........DESTINATION TAG [281] =        57
f...........DIGIN 1 (E2) [39] = FALSE
f.........DIGIN 2 (E3)
f...........VALUE FOR TRUE [283] =      0.01 %
f...........VALUE FOR FALSE [284] =      0.00 %
f...........OUTPUT [528] =      0.00 %
f...........DESTINATION TAG [285] =        92
f...........DIGIN 2 (E3) [40] = FALSE
f.........DIGIN 3 (E4)
f...........VALUE FOR TRUE [287] =      0.01 %
f...........VALUE FOR FALSE [288] =      0.00 %
f...........OUTPUT [529] =      0.00 %
f...........DESTINATION TAG [289] =        93
f...........DIGIN 3 (E4) [41] = FALSE
f.........DIGIN 4 (E5)
f...........VALUE FOR TRUE [523] =      0.01 %
f...........VALUE FOR FALSE [524] =      0.00 %
f...........OUTPUT [508] =      0.00 %
f...........DESTINATION TAG [525] =        94
f...........DIGIN 4 (E5) [521] = FALSE
f.........DIGIN B6 DEST [451] =        71
f.........DIGIN B6 JOG [37] = FALSE
f.........DIGIN B7 DEST [450] =        70
f.........DIGIN B7 START [36] = FALSE
f.........DIGIN B8 DEST [452] =        72
f.........DIGIN B8 ENABLE [38] = FALSE
f.......DIGITAL OUTPUTS
f.........DIGOUT 1 (E6)
f...........THRESHOLD (>) [292] =      0.00 %
f...........INPUT [324] =      0.01 %*
f...........OFFSET [321] =      0.00 %
f...........MODULUS [293] = FALSE
f...........INVERT [327] = FALSE
f...........SOURCE TAG [294] =        17
f...........DIGOUT 1 (E6) [42] = TRUE
f.........DIGOUT 2 (E7)
f...........THRESHOLD (>) [296] =      0.00 %
f...........INPUT [325] =      0.01 %*
f...........OFFSET [322] =      0.00 %
f...........MODULUS [297] = FALSE
f...........INVERT [328] = FALSE
f...........SOURCE TAG [298] =        12
f...........DIGOUT 2 (E7) [43] = TRUE
f.........DIGOUT 3 (E8)
f...........THRESHOLD (>) [300] =      0.00 %
f...........INPUT [326] =      0.00 %
f...........OFFSET [323] =      0.00 %
f...........MODULUS [301] = TRUE
f...........INVERT [329] = FALSE
f...........SOURCE TAG [302] =       559
f...........DIGOUT 3 (E8) [44] = FALSE
f.......CONFIGURE 5703
f.........SOURCE TAG [304] =       176
f.........DESTINATION TAG [305] =       371
f.......BLOCK DIAGRAM
f.........RAISE/LOWER DEST [307] =         0
f.........RAMP O/P DEST [308] =       372
f.........PRESET DEST [111] =       373
f.........S-RAMP DEST [103] =         0
f.........HOME DEST [389] =         0
f.........SPT SUM1 OP DEST [345] =        58
f.........SPT SUM2 OP DEST [346] =       176
f.........SPT SUM3 OP DEST [347] =         0
f.........Pid O/P DEST [552] =         0
f.........Pid ERROR DEST [556] =       545
f.........POSITION DEST [341] =         0
f.........REF.SPEED DEST [656] =         0
f.........VALUE OP 1 DEST [697] =         0
f.........VALUE OP 2 DEST [704] =         0
f.........VALUE OP 3 DEST [711] =         0
f.........VALUE OP 4 DEST [718] =         0
f.........LOGIC OP 1 DEST [725] =         0
f.........LOGIC OP 2 DEST [732] =         0
f.........LOGIC OP 3 DEST [739] =         0
f.........LOGIC OP 4 DEST [746] =         0
f.......INTERNAL LINKS
f.........LINK 1 SOURCE [180] =         0
f.........LINK 1 DEST [181] =         0
f.........LINK 2 SOURCE [182] =         0
f.........LINK 2 DEST [183] =         0
f.........LINK 3 SOURCE [184] =         0
f.........LINK 3 DEST [185] =         0
f.........LINK 4 SOURCE [186] =         0
f.........LINK 4 DEST [187] =         0
f.........LINK 5 SOURCE [560] =         0
f.........LINK 5 DEST [561] =         0
f.........LINK 6 SOURCE [562] =         0
f.........LINK 6 DEST [563] =         0
f.........LINK 7 SOURCE [564] =         0
f.........LINK 7 DEST [565] =         0
f.........LINK 8 SOURCE [566] =         0
f.........LINK 8 DEST [567] =         0
f.........LINK 9 SOURCE [568] =         0
f.........LINK 9 DEST [569] =         0
f.........LINK 10 SOURCE [570] =         0
f.........LINK 10 DEST [571] =         0
f.........LINK 11 SOURCE [572] =         0
f.........LINK 11 DEST [573] =         0
f.........LINK 12 SOURCE [574] =         0
f.........LINK 12 DEST [575] =         0
f.........LINK 13 SOURCE [576] =         0
f.........LINK 13 DEST [577] =         0
f.........LINK 14 SOURCE [578] =         0
f.........LINK 14 DEST [579] =         0
f.........LINK 15 SOURCE [580] =         0
f.........LINK 15 DEST [581] =         0
f.........LINK 16 SOURCE [582] =         0
f.........LINK 16 DEST [583] =         0
h.....RESERVED
h.......ENG USE ONLY
h.........Id Iq LOOPS
h...........Id PROP GAIN [401] =         2
h...........MAX Id DEMAND [403] =      7500
h...........MIN Id DEMAND [404] =     -2000
h...........MAX Id INTEGRAL [405] =      5000
h...........MIN Id INTEGRAL [406] =     -5000
h...........Id, Iq INT GAIN [794] =      2500
h...........MAX Iq INTEGRAL [795] =      1250
h...........MIN Iq INTEGRAL [796] =     -1250
h...........FAST ID IQ LOOPS [792] = FALSE
h.........MISCELLANEOUS
h...........584S CHASSIS [169] = TRUE
h...........DISABLE CO-PRO [154] = FALSE
h...........BRAKE THRESHOLD [411] =       936
h...........MODN INDEX [412] =      7500
h...........AD POS THRESHOLD [413] =         6
h...........AD NEG THRESHOLD [414] =         6
h...........DRIVE STATUS [168] = FALSE
h...........RESET VEC VARS [167] = FALSE*
h...........RESET EAT [155] = FALSE
h...........CYCLE TIME [315] =      8000
h...........TICK LENGTH [497] =    15.452
h...........SYS TIME [351] =  0xC352
h...........SPD.FBK. TC [319] =      0.10 SECS
h...........TORQUE.FBK.TC [320] =      0.10 SECS
h...........IFB ADJUST [495] =     115.0 %
h...........TOTAL TRIP COUNT [624] =  0x0000
h...........SYSTEM RESET [64] = FALSE
h.........TEST FUNCTIONS
```

```
h...........SELECT FUNCTION [418] =         0
h...........SPEED PERIOD [419] =      1000
h...........SPEED AMPLITUDE [420] =       500
h...........SPEED OFFSET [421] =         0
h...........CURRENT PERIOD [422] =        40
h...........CURR AMPLITUDE [423] =       200
h...........CURRENT OFFSET [424] =         0
h...........MEAS SPD LOOP BW [634] = FALSE
h...........NO OF AVERAGES [635] =     30000
h...........IMPLSE CNT LNGTH [636] =     30000
h...........IMPULSE HEIGHT [637] =     30000
h.........TRACE
h...........TRACE MODE [426] =         1
h...........PRESET COUNT [427] =         0
h...........NO OF PASSES [428] =         1
h...........TRACE INDEX [772] =  0xC000
h...........TRACE TRIGGER [793] = TRUE*
h...........TRACE ADDRESS 1 [430] =  0xD0B6*
h...........TRACE ADDRESS 2 [431] =  0x0038*
h...........TRACE ADDRESS 3 [432] =  0x0068*
h...........TRACE ADDRESS 4 [433] =  0x0036*
h...........TRACE ADDRESS 5 [434] =  0x007A*
h...........TRACE ADDRESS 6 [435] =  0x006A*
h...........TRACE ADDRESS 7 [436] =  0x0078*
h...........TRACE ADDRESS 8 [437] =  0x0082*
h.........FIELD WK VARS
h...........MAG I SCALE 0 [454] =     100.0 %
h...........MAG I SCALE 1 [455] =      77.0 %
h...........MAG I SCALE 2 [456] =      63.0 %
h...........MAG I SCALE 3 [457] =      50.0 %
h...........MAG I SCALE 4 [586] =      40.0 %
h...........MAG I SCALE 5 [459] =      35.0 %
h...........MAG I SCALE 6 [460] =      30.0 %
h...........MAG I SCALE 7 [461] =      25.0 %
h...........MAG I SCALE 8 [462] =      20.0 %
h...........MAG I SCALE 9 [630] =      11.1 %
h...........TR SCALE 0 [587] =     100.0 %
h...........TR SCALE 1 [588] =     100.0 %
h...........TR SCALE 2 [589] =     100.0 %
h...........TR SCALE 3 [590] =     100.0 %
h...........TR SCALE 4 [591] =     100.0 %
h...........TR SCALE 5 [592] =     100.0 %
h...........TR SCALE 6 [593] =     100.0 %
h...........TR SCALE 7 [594] =     100.0 %
h...........TR SCALE 8 [595] =     100.0 %
h...........TR SCALE 9 [631] =     100.0 %
h.........AUTOTUNE MISC
h...........kimr_int [487] =      1000
h...........AUTO RAMP INCRMT [488] =         2
h...........LINK V FILT GAIN [489] =       500
h...........TERM V FILT GAIN [490] =       500
h...........TERM V FLTGN DSP [491] =        50
h...........AUTOCAL MAX RPM [492] =         0 RPM
h...........LOAD FACTOR @BS [493] =      95.0 %
h...........LOAD FACTOR @2BS [494] =      90.0 %
h...........MIN LINK V RATIO [628] =     85.00 %
h.........TERM V CONTROL
h...........% LOAD @BASE SPD [614] =      5.00 %
h...........TVolts INT RANGE [615] =     50.00 %
h...........SPD @ TV INT =0 [616] =     50.00 %
h...........iq @TV INTGN=MIN [617] =     100.0 %
h...........iq @TV INTGN=MAX [618] =     200.0 %
h...........LOOP RESPNSE=nTr [619] =         5
h...........FAST RESPONSE % [620] =    102.50 %
h...........TERM V INTEGRAL [623] =    100.00 %
h.........DIAGNOSTICS RESD
h...........SLIP FREQUENCY [625] =      0.00 Hz
h...........RUN SLIP F DIAG [627] = FALSE
h.....PERSISTENT DATA
h...../WRITE [682] = FALSE
h.....TAG No 1 [679] =         0
h.....TAG No  2 [680] =         0
h.....COUNT [681] =         0
f.....PEEK DIAGNOSTIC
f.....PEEK TAG [340] =         7
f.....PEEK SCALE [350] =    100.00 %
h.....PEEK DATA [349] = [0xC000] = 0000
....PARAMETER SAVE [208] = UP TO ACTION
......SAVE (U/D)
....CONFIGURE DRIVE
......ENCODER LINES [131] =      2048
......MAX SPEED RPM [130] =      1500 RPM
......BASE FREQUENCY [448] =      50.0 Hz
......MOTOR VOLTS [486] =       415 VOLTS
......MOTOR RATING RMS [134] =       1.0 AMPS
......NO.OF POLES [399] =         4
......NAMEPLATE RPM [135] =      1440 RPM
```

```
......MAG CURRENT % [453] =     30.00 %
......ROTOR TIME CONST [458] =     100.0 mSECS
......ENCODER SUPPLY [774] =        50 %
......ENCODER SIGN [164] = POS
......MAIN TORQUE LIM. [159] =    100.00 %
......AUTOTUNE FLAG [482] = FALSE
......SPD. PROP. GAIN [161] =     10.00
......SPD. INT. TIME [162] =       100 mSECS
```

NOTES:
* Parameter is not at factory default.
f Menu is only visible with FULL MENU = TRUE.
h Menu is hidden and is for engineering use only.
_

APPENDIX C

TAGS by Number

Tag	Mn	Text	Defau	EIASCI	Enum	Min	Max	CFG	RO
0	0	No Text	Odd Ball	0		0	65535	RECFG	RO
1	1	No Text	0	0		0	65535	RECFG	RO
2	2	No Text							
3	3	No Text							
4	4	MENU LEVEL							
5	5	::DIAGNOSTICS							
6	6	::SETUP PARAMETERS::SPEED LOOP::TOTAL SPD.DMD.	0.00%	0		-300	300	NOCFG	RO
7	7	::SETUP PARAMETERS::SPEED LOOP::SPEED FB UNFIL	0.00%	0		-300	300	NOCFG	RO
8	8	::SETUP PARAMETERS::SPEED LOOP::SPEED ERROR	0.00%	0		-300	300	NOCFG	RO
9	9	::SETUP PARAMETERS::TORQUE LOOP::TORQUE DEMAND	0.00%	0		-300	300	NOCFG	RO
10	0a	::SETUP PARAMETERS::TORQUE LOOP::TORQUE FEEDBACK	0.00%	0		-300	300	NOCFG	RO
11	0b	::SETUP PARAMETERS::SPEED LOOP::SPEED FEEDBACK	0.00%	0		-300	300	NOCFG	RO
12	0c	::SETUP PARAMETERS::ALARMS / SEQ::HEALTH OUTPUT	FALSE	>0000	FALSE; TRUE;	0	1	NOCFG	RO
13	0d	::SETUP PARAMETERS::TORQUE LOOP::TORQUE LIMITS::ACTUAL POS I LIM	0.00%	0		-300	300	NOCFG	RO
14	0e	::SETUP PARAMETERS::TORQUE LOOP::TORQUE LIMITS::ACTUAL NEG I LIM	0.00%	0		-300	300	NOCFG	RO
15	0f	::SETUP PARAMETERS::INVERSE TIME::INVERSE TIME O/P	0.00%	0		-300	300	NOCFG	RO
16	0g	::SETUP PARAMETERS::TORQUE LOOP::TORQUE LIMITS::AT CURRENT LIMIT	FALSE	>0000	FALSE; TRUE;	0	1	NOCFG	RO
17	0h	::SETUP PARAMETERS::SPEED LOOP::ZERO SPEED::AT ZERO SPEED	FALSE	>0000	FALSE; TRUE;	0	1	NOCFG	RO
18	0i	::SETUP PARAMETERS::SPEED LOOP::ZERO SPEED::AT ZERO SETPOINT	FALSE	>0000	FALSE; TRUE;	0	1	NOCFG	RO
19	0j	::SETUP PARAMETERS::SPEED LOOP::ZERO SPEED::AT STANDSTILL	FALSE	>0000	FALSE; TRUE;	0	1	NOCFG	RO
20	0k	::SETUP PARAMETERS::ALARMS / SEQ::STALL TRIP	OK	0	OK; WARNING; ACTIVE;	0	2	NOCFG	RO
21	0l	::SETUP PARAMETERS::RAMPS::RAMPING	FALSE	>0000	FALSE; TRUE;	0	1	NOCFG	RO
22	0m	::SETUP PARAMETERS::STOP RATES::PROGRAM STOP	FALSE	>0000	FALSE; TRUE;	0	1	NOCFG	RO
23	0n	::SETUP PARAMETERS::ALARMS / SEQ::DRIVE START	FALSE	>0000	FALSE; TRUE;	0	1	NOCFG	RO
24	0o	::SETUP PARAMETERS::ALARMS / SEQ::DRIVE ENABLE	FALSE	>0000	FALSE; TRUE;	0	1	NOCFG	RO
25	0p	::SETUP PARAMETERS::ALARMS / SEQ::OPERATING MODE	INITIAL	0	INITIAL; STOPPED; F-STOP; AUTOTUNE; RUN; JOG; RMP STOP; RUN STOP; JOG STOP; P-START1; P-START2;	0	10	NOCFG	RO
26	0q	::SETUP PARAMETERS::STOP RATES::COAST STOP	FALSE	>0000	FALSE; TRUE;	0	1	NOCFG	RO
27	0r	::SETUP PARAMETERS::ALARMS / SEQ::HEALTHY	FALSE	>0000	FALSE; TRUE;	0	1	NOCFG	RO
28	0s	::SETUP PARAMETERS::ALARMS / SEQ::RUN	FALSE	>0000	FALSE; TRUE;	0	1	NOCFG	RO
29	0t	::SYSTEM::CONFIGURE I/O::ANALOG INPUTS::ANIN 1 (C3)::ANIN 1 (C3)	0.000 VOLTS	0		-10	10	NOCFG	RO
30	0u	No Text	0.000 VOLTS	0		-10	10	NOCFG	RO
31	0v	::SYSTEM::CONFIGURE I/O::ANALOG INPUTS::ANIN 3 (F2)::ANIN 3 (F2)	0.000 VOLTS	0		-10	10	NOCFG	RO
32	0w	::SYSTEM::CONFIGURE I/O::ANALOG INPUTS::ANIN 4 (F3)::ANIN 4 (F3)	0.000 VOLTS	0		-10	10	NOCFG	RO
33	0x	::SYSTEM::CONFIGURE I/O::ANALOG INPUTS::ANIN 5 (F4)::ANIN 5 (F4)	0.000 VOLTS	0		-10	10	NOCFG	RO
34	0y	::SYSTEM::CONFIGURE I/O::ANALOG OUTPUTS::ANOUT 1 (C5)::ANOUT 1 (C5)	0.000 VOLTS	0		-10	10	NOCFG	RW
35	0z	::SYSTEM::CONFIGURE I/O::ANALOG OUTPUTS::ANOUT 2 (F5)::ANOUT 2 (F5)	0.000 VOLTS	0		-10	10	NOCFG	RW
36	10	::SYSTEM::CONFIGURE I/O::DIGITAL INPUTS::DIGIN B7 START	FALSE	>0000	FALSE; TRUE;	0	1	NOCFG	RO
37	11	::SYSTEM::CONFIGURE I/O::DIGITAL INPUTS::DIGIN B6 JOG	FALSE	>0000	FALSE; TRUE;	0	1	NOCFG	RO
38	12	::SYSTEM::CONFIGURE I/O::DIGITAL INPUTS::DIGIN B8 ENABLE	FALSE	>0000	FALSE; TRUE;	0	1	NOCFG	RO
39	13	::SYSTEM::CONFIGURE I/O::DIGITAL INPUTS::DIGIN 1 (E2)::DIGIN 1 (E2)	FALSE	>0000	FALSE; TRUE;	0	1	NOCFG	RO
40	14	::SYSTEM::CONFIGURE I/O::DIGITAL INPUTS::DIGIN 2 (E3)::DIGIN 2 (E3)	FALSE	>0000	FALSE; TRUE;	0	1	NOCFG	RO
41	15	::SYSTEM::CONFIGURE I/O::DIGITAL INPUTS::DIGIN 3 (E4)::DIGIN 3 (E4)	FALSE	>0000	FALSE; TRUE;	0	1	NOCFG	RO
42	16	::SYSTEM::CONFIGURE I/O::DIGITAL OUTPUTS::DIGOUT 1 (E6)::DIGOUT 1 (E6)	FALSE	>0000	FALSE; TRUE;	0	1	NOCFG	RO
43	17	::SYSTEM::CONFIGURE I/O::DIGITAL OUTPUTS::DIGOUT 2 (E7)::DIGOUT 2 (E7)	FALSE	>0000	FALSE; TRUE;	0	1	NOCFG	RO
44	18	::SYSTEM::CONFIGURE I/O::DIGITAL OUTPUTS::DIGOUT 3 (E8)::DIGOUT 3 (E8)	FALSE	>0000	FALSE; TRUE;	0	1	NOCFG	RO
45	19	::SETUP PARAMETERS::RAISE/LOWER::RAISE/LOWER O/P	0.00%	0		-300	300	NOCFG	RO
46	1a	::SETUP PARAMETERS::SETPOINT SUM 1::SPT SUM O/P 1	0.00%	0		-100	100	NOCFG	RO
47	1b	::SETUP PARAMETERS::RAMPS::RAMP OUTPUT	0.00%	0		-100	100	NOCFG	RO
48	1c	::SETUP PARAMETERS::SPEED LOOP::SPEED SETPOINT	0.00%	0		-300	300	NOCFG	RO
49	1d	::SETUP PARAMETERS::SPEED LOOP::SPEED SETPOINTS::SEQ RUN INPUT	0.00%	0		-100	100	NOCFG	RO
50	1e	::SETUP PARAMETERS::SPEED LOOP::SPEED SETPOINTS::SEQ OUTPUT	0.00%	0		-100	100	NOCFG	RO
51	1f	::SETUP PARAMETERS::SPEED LOOP::ENCODER	0 RPM	0		-20000	20000	NOCFG	RO
52	1g	::SETUP PARAMETERS							
53	1h	::SETUP PARAMETERS::RAMPS							
54	1i	::SETUP PARAMETERS::RAMPS::RAMP ACCEL TIME	10.0 SECS	10		0	600	RECFG	RW
55	1j	::SETUP PARAMETERS::RAMPS::RAMP DECEL TIME	10.0 SECS	10		0	600	RECFG	RW
56	1k	::SETUP PARAMETERS::RAMPS::RAMP QUENCH	FALSE	>0000	FALSE; TRUE;	0	1	RECFG	RW
57	1l	::SETUP PARAMETERS::RAMPS::RAMP HOLD	FALSE	>0000	FALSE; TRUE;	0	1	RECFG	RW
58	1m	::SETUP PARAMETERS::RAMPS::RAMP INPUT	0.00%	0		-100	100	RECFG	RW
59	1n	::SETUP PARAMETERS::RAMPS::% S-RAMP	0.00%	0		0	100	RECFG	RW
60	1o	::SETUP PARAMETERS::RAMPS::RAMPING THRESH.	1.00%	1		0	100	RECFG	RW
61	1p	::SETUP PARAMETERS::RAMPS::AUTO RESET	TRUE	>0001	FALSE; TRUE;	0	1	RECFG	RW
62	1q	::SETUP PARAMETERS::RAMPS::EXTERNAL RESET	FALSE	>0000	FALSE; TRUE;	0	1	RECFG	RW
63	1r	::SETUP PARAMETERS::RAMPS::RESET VALUE	0.00%	0		-100	100	RECFG	RW

Tag	Mn	Text	Defau	EIASCI	Enum	Min	Max	CFG	RO
64	1s	::SYSTEM::RESERVED::ENG USE ONLY::MISCELLANEOUS::SYSTEM RESET	FALSE	>0000	FALSE; TRUE;	0	1	NOCFG	RO
65	1t	::SETUP PARAMETERS::AUX I/O							
66	1u	::SETUP PARAMETERS::AUX I/O::AUX START	TRUE	>0001	FALSE; TRUE;	0	1	RECFG	RW
67	1v	::SETUP PARAMETERS::AUX I/O::AUX JOG	TRUE	>0001	FALSE; TRUE;	0	1	RECFG	RW
68	1w	::SETUP PARAMETERS::AUX I/O::AUX ENABLE	TRUE	>0001	FALSE; TRUE;	0	1	RECFG	RW
69	1x	::PASSWORD::BYPASS PASSWORD	FALSE	>0000	FALSE; TRUE;	0	1	RECFG	RW
70	1y	::SETUP PARAMETERS::AUX I/O::START	FALSE	>0000	FALSE; TRUE;	0	1	RECFG	RW
71	1z	::SETUP PARAMETERS::AUX I/O::JOG INPUT	FALSE	>0000	FALSE; TRUE;	0	1	RECFG	RW
72	20	::SETUP PARAMETERS::AUX I/O::ENABLE	FALSE	>0000	FALSE; TRUE;	0	1	RECFG	RW
73	21	No Text	0.10 SECS	0.1		0.01	60	RECFG	RW
74	22	::SETUP PARAMETERS::JOG							
75	23	::SETUP PARAMETERS::JOG::JOG SPEED 1	10.00%	10		-100	100	RECFG	RW
76	24	::SETUP PARAMETERS::JOG::JOG SPEED 2	-10.00%	-10		-100	100	RECFG	RW
77	25	::SETUP PARAMETERS::REF ENCODER::INPUT SCALING::FBK ENCODER CNT	0	0		0	65535	NOCFG	RO
78	26	::SETUP PARAMETERS::TORQUE LOOP::CURRENT FEEDBACK	0.00%	0		-300	300	NOCFG	RO
79	27	No Text	0.00%	0		-100	100	RECFG	RW
80	28	::SETUP PARAMETERS::JOG::MODE	FALSE	>0000	FALSE; TRUE;	0	1	RECFG	RW
81	29	::SETUP PARAMETERS::RAISE/LOWER							
82	2a	::SETUP PARAMETERS::RAISE/LOWER::RESET VALUE	0.00%	0		-100	100	RECFG	RW
83	2b	::SETUP PARAMETERS::RAISE/LOWER::RAMP RATE	60.0	SECS 60		0.1	600	RECFG	RW
84	2c	No Text	TRUE	>0001	FALSE; TRUE;	0	1	NOCFG	RW
85	2d	::SETUP PARAMETERS::RAISE/LOWER::RAISE INPUT	FALSE	>0000	FALSE; TRUE;	0	1	RECFG	RW
86	2e	::SETUP PARAMETERS::RAISE/LOWER::LOWER INPUT	FALSE	>0000	FALSE; TRUE;	0	1	RECFG	RW
87	2f	::SETUP PARAMETERS::RAISE/LOWER::MIN VALUE	-100.00%	-100		-300	300	RECFG	RW
88	2g	::SETUP PARAMETERS::RAISE/LOWER::MAX VALUE	100.00%	100		-300	300	RECFG	RW
89	2h	::SETUP PARAMETERS::RAISE/LOWER::EXTERNAL RESET	FALSE	>0000	FALSE; TRUE;	0	1	RECFG	RW
90	2i	::CONFIGURE DRIVE							
91	2j	::SETUP PARAMETERS::PRESET							
92	2k	::SETUP PARAMETERS::PRESET::SELECT 1	FALSE	>0000	FALSE; TRUE;	0	1	RECFG	RW
93	2l	::SETUP PARAMETERS::PRESET::SELECT 2	FALSE	>0000	FALSE; TRUE;	0	1	RECFG	RW
94	2m	::SETUP PARAMETERS::PRESET::SELECT 3	FALSE	>0000	FALSE; TRUE;	0	1	RECFG	RW
95	2n	::SETUP PARAMETERS::PRESET::INPUT 1	0.00%	0		-300	300	RECFG	RW
96	2o	::SETUP PARAMETERS::PRESET::INPUT 2	25.00%	25		-300	300	RECFG	RW
97	2p	::SETUP PARAMETERS::PRESET::INPUT 3	50.00%	50		-300	300	RECFG	RW
98	2q	::SETUP PARAMETERS::PRESET::INPUT 4	100.00%	100		-300	300	RECFG	RW
99	2r	::SETUP PARAMETERS::PRESET::INPUT 5	0.00%	0		-300	300	RECFG	RW
100	2s	::SETUP PARAMETERS::PRESET::INPUT 6	-25.00%	-25		-300	300	RECFG	RW
101	2t	::SETUP PARAMETERS::PRESET::INPUT 7	-50.00%	-50		-300	300	RECFG	RW
102	2u	::SETUP PARAMETERS::PRESET::INPUT 8	-100.00%	-100		-300	300	RECFG	RW
103	2v	::SYSTEM::CONFIGURE I/O::BLOCK DIAGRAM::S-RAMP DEST	0	0		0	800	RECFG	RI
104	2w	::SETUP PARAMETERS::S-RAMP::EXTERNAL RESET	FALSE	>0000	FALSE; TRUE;	0	1	RECFG	RW
105	2x	::SETUP PARAMETERS::S-RAMP::RESET VALUE	0.00%	0		-100	100	RECFG	RW
106	2y	::SETUP PARAMETERS::S-RAMP::ACCELERATION	10	10		0	150	RECFG	RW
107	2z	::SETUP PARAMETERS::S-RAMP::JERK 1	10	10		0	150	RECFG	RW
108	30	::SETUP PARAMETERS::S-RAMP::QUENCH	FALSE	>0000	FALSE; TRUE;	0	1	RECFG	RW
109	31	::SETUP PARAMETERS::PRESET::INVERT O/P	FALSE	>0000	FALSE; TRUE;	0	1	RECFG	RW
110	32	::SETUP PARAMETERS::PRESET::PRESET O/P	0.00%	0		-300	300	NOCFG	RO
111	33	::SYSTEM::CONFIGURE I/O::BLOCK DIAGRAM::PRESET DEST	0	0		0	800	RECFG	RI
112	34	::SETUP PARAMETERS::STOP RATES::CONTACTOR DELAY	0.5	SECS0.5		0	1000	RECFG	RW
113	35	::SETUP PARAMETERS::JOG::JOG ACCEL RATE	10.0	SECS 10		0	100	RECFG	RW
114	36	::SETUP PARAMETERS::JOG::JOG DECEL RATE	10.0	SECS 10		0	100	RECFG	RW
115	37	::SETUP PARAMETERS::INVERSE TIME							
116	38	::SETUP PARAMETERS::INVERSE TIME::AIMING POINT	105.00%	105		100	200	RECFG	RW
117	39	::SETUP PARAMETERS::INVERSE TIME::DELAY	60.0	SECS 60		0	1000	RECFG	RW
118	3a	::SETUP PARAMETERS::INVERSE TIME::DOWN RATE	10.0	SECS 10		0	600	RECFG	RW
119	3b	::SETUP PARAMETERS::STOP RATES							
120	3c	::SETUP PARAMETERS::STOP RATES::RUN STOP TIME	10.0	SECS 10		0	1000	RECFG	RW
121	3d	::SETUP PARAMETERS::STOP RATES::RUN STOP LIMIT	60.0	SECS 60		0	1000	RECFG	RW
122	3e	::SETUP PARAMETERS::STOP RATES::PRE-START DELAY	0.500	SECS 0.5		0	30	RECFG	RW
123	3f	::SETUP PARAMETERS::STOP RATES::FAST STOP TIME	1.0	SECS 1		0	1000	RECFG	RW
124	3g	::SETUP PARAMETERS::STOP RATES::FAST STOP LIMIT	60.0	SECS 60		0	1000	RECFG	RW
125	3h	::SETUP PARAMETERS::STOP RATES::USE SYSTEM RAMP	TRUE	>0001	FALSE; TRUE;	0	1	RECFG	RW
126	3i	::SETUP PARAMETERS::STOP RATES::STOP ZERO SPEED	1.00%	1		0	100	RECFG	RW
127	3j	::SETUP PARAMETERS::CALIBRATION							
128	3k	::SETUP PARAMETERS::ALARMS / SEQ::MOTOR TMP.TRIP	75.00%	75		0	200	RECFG	RW
129	3l	::SETUP PARAMETERS::ALARMS / SEQ::HEATSINK LEVEL	17.00%	17		0	200	RECFG	RW
130	3m	::CONFIGURE DRIVE::MAX SPEED RPM	1500	RPM1500		0	32000	RECFG	RW
131	3n	::CONFIGURE DRIVE::ENCODER LINES	2048	2048		0	8000	NOCFG	RI
132	3o	::SETUP PARAMETERS::SPEED LOOP::ZERO SPEED::ZERO SPD HYST	0.10%	0.1		0	100	RECFG	RW
133	3p	::SYSTEM::SOFTWARE INFO::DRIVE RATING RMS	0.0	AMPS 0		0.1	3000	NOCFG	RO
134	3q	::CONFIGURE DRIVE::MOTOR RATING RMS	1.0	AMPS 1		0.1	3000	RECFG	RI

Tag	Mn	Text	Defau	EIASCI	Enum	Min	Max	CFG	RO
135	3r	::CONFIGURE DRIVE::NAMEPLATE RPM	1440	RPM1440		0	32000	RECFG	RI
136	3s	::SETUP PARAMETERS::ALARMS / SEQ::STALL TORQUE	95.00%	95		0	200	RECFG	RW
137	3t	::SETUP PARAMETERS::ALARMS / SEQ::STALL DELAY	10	10		0	300	RECFG	RW
138	3u	::SETUP PARAMETERS::ALARMS / SEQ::STALL SPEED	4.00%	4		0	300	RECFG	RW
139	3v	::SETUP PARAMETERS::ALARMS / SEQ::OVER SPEED LEVEL	120.00%	120		0	300	NOCFG	RI
140	3w	::SETUP PARAMETERS::ALARMS / SEQ							
141	3x	No Text	0.00%	0		-200	200	NOCFG	RO
142	3y	::SETUP PARAMETERS::ALARMS / SEQ::5703 RCV.INHIBIT	FALSE	>0000	FALSE; TRUE;	0	1	RECFG	RW
143	3z	::SETUP PARAMETERS::ALARMS / SEQ::STALL INHIBIT	FALSE	>0000	FALSE; TRUE;	0	1	RECFG	RW
144	40	::SETUP PARAMETERS::ALARMS / SEQ::EXTERNAL TRIP	FALSE	>0000	FALSE; TRUE;	0	1	RECFG	RW
145	41	::SETUP PARAMETERS::ALARMS / SEQ::OVER SPD INHIBIT	FALSE	>0000	FALSE; TRUE;	0	1	RECFG	RW
146	42	::SETUP PARAMETERS::ALARMS / SEQ::MOTR.TMP.INHIBIT	FALSE	>0000	FALSE; TRUE;	0	1	RECFG	RW
147	43	::SETUP PARAMETERS::TORQUE LOOP							
148	44	::SETUP PARAMETERS::INVERSE TIME::UP RATE	120.0	SECS 120		0	600	RECFG	RW
149	45	::SETUP PARAMETERS::SPEED LOOP::ADVANCED::1 / GAIN	70	70		0	255	RECFG	RI
150	46	::SYSTEM::SOFTWARE INFO::CO-PRO PRESENT	FALSE	>0000	FALSE; TRUE;	0	1	NOCFG	RO
151	47	::SYSTEM::SOFTWARE INFO::MID VOLTS	FALSE	>0000	FALSE; TRUE;	0	1	NOCFG	RO
152	48	::SYSTEM::SOFTWARE INFO::CHASSIS TYPE	0	0		4	10	NOCFG	RO
153	49	::SETUP PARAMETERS::TORQUE LOOP::TORQUE LIMITS::SYMMETRIC TQ.LIMI	TRUE	>0001	FALSE; TRUE;	0	1	RECFG	RW
154	4a	::SYSTEM::RESERVED::ENG USE ONLY::MISCELLANEOUS::DISABLE CO-PRO	FALSE	>0000	FALSE; TRUE;	0	1	NOCFG	RW
155	4b	::SYSTEM::RESERVED::ENG USE ONLY::MISCELLANEOUS::RESET EAT	FALSE	>0000	FALSE; TRUE;	0	1	NOCFG	RI
156	4c	No Text	0.75 kW 380-460v	0		0	28	NOCFG	RO
157	4d	::SETUP PARAMETERS::TORQUE LOOP::TORQUE LIMITS::POS TORQUE LIMIT	150.00%	150		-200	200	RECFG	RW
158	4e	::SETUP PARAMETERS::TORQUE LOOP::TORQUE LIMITS::NEG TORQUE LIMIT	-150.00%	-150		-200	200	RECFG	RW
159	4f	::CONFIGURE DRIVE::MAIN TORQUE LIM.	100.00%	100		0	200	RECFG	RW
160	4g	::SETUP PARAMETERS::SPEED LOOP							
161	4h	::CONFIGURE DRIVE::SPD. PROP. GAIN	10	10		0	250	RECFG	RW
162	4i	::CONFIGURE DRIVE::SPD. INT. TIME	100 mSECS	100		1	30000	RECFG	RW
163	4j	::SETUP PARAMETERS::SPEED LOOP::INT. DEFEAT	FALSE	>0000	FALSE; TRUE;	0	1	RECFG	RW
164	4k	::CONFIGURE DRIVE::ENCODER SIGN	POS	>0001	NEG; POS;	0	1	NOCFG	RI
165	4l	No Text	0	0		0	65535	RECFG	RO
166	4m	::SETUP PARAMETERS::ALARMS / SEQ::ACK ALARM	TRUE	>0001	FALSE; TRUE;	0	1	RECFG	RW
167	4n	::SYSTEM::RESERVED::ENG USE ONLY::MISCELLANEOUS::RESET VEC VARS	TRUE	>0001	FALSE; TRUE;	0	1	NOCFG	RW
168	4o	::SYSTEM::RESERVED::ENG USE ONLY::MISCELLANEOUS::DRIVE STATUS	FALSE	>0000	FALSE; TRUE;	0	1	NOCFG	RO
169	4p	::SYSTEM::RESERVED::ENG USE ONLY::MISCELLANEOUS::584S CHASSIS	TRUE	>0001	FALSE; TRUE;	0	1	NOCFG	RI
170	4q	::SETUP PARAMETERS::SPEED LOOP::SPEED SETPOINTS							
171	4r	::SETUP PARAMETERS::SPEED LOOP::SPEED SETPOINTS::DIRECT SPT1	0.00%	0		-300	300	NOCFG	RO
172	4s	::SETUP PARAMETERS::SPEED LOOP::SPEED SETPOINTS::DIRECT RATIO	0.1	0.1		-1	1	RECFG	RW
173	4t	::SETUP PARAMETERS::SPEED LOOP::SPEED SETPOINTS::DIRECT SPT. MAX	100.00%	100		0	100	RECFG	RW
174	4u	::SETUP PARAMETERS::SPEED LOOP::SPEED SETPOINTS::DIRECT SPT. MIN	-100.00%	-100		-100	0	RECFG	RW
175	4v	::SETUP PARAMETERS::SPEED LOOP::SPEED SETPOINTS::DIRECT ENABLE	FALSE	>0000	FALSE; TRUE;	0	1	RECFG	RW
176	4w	::SETUP PARAMETERS::SPEED LOOP::SPEED SETPOINTS::MAIN SPD.SPT.	0.00%	0		-110	110	RECFG	RW
177	4x	::SETUP PARAMETERS::SPEED LOOP::SPEED SETPOINTS::MAX SPEED	100.00%	100		0	110	RECFG	RW
178	4y	::SETUP PARAMETERS::SPEED LOOP::SPEED SETPOINTS::MIN SPEED	-100.00%	-100		-110	0	RECFG	RW
179	4z	::SYSTEM::CONFIGURE I/O::INTERNAL LINKS							
180	50	::SYSTEM::CONFIGURE I/O::INTERNAL LINKS::LINK 1 SOURCE	0	0		0	800	RECFG	RI
181	51	::SYSTEM::CONFIGURE I/O::INTERNAL LINKS::LINK 1 DEST	0	0		0	800	RECFG	RI
182	52	::SYSTEM::CONFIGURE I/O::INTERNAL LINKS::LINK 2 SOURCE	0	0		0	800	RECFG	RI
183	53	::SYSTEM::CONFIGURE I/O::INTERNAL LINKS::LINK 2 DEST	0	0		0	800	RECFG	RI
184	54	::SYSTEM::CONFIGURE I/O::INTERNAL LINKS::LINK 3 SOURCE	0	0		0	800	RECFG	RI
185	55	::SYSTEM::CONFIGURE I/O::INTERNAL LINKS::LINK 3 DEST	0	0		0	800	RECFG	RI
186	56	::SYSTEM::CONFIGURE I/O::INTERNAL LINKS::LINK 4 SOURCE	0	0		0	800	RECFG	RI
187	57	::SYSTEM::CONFIGURE I/O::INTERNAL LINKS::LINK 4 DEST	0	0		0	800	RECFG	RI
188	58	::SETUP PARAMETERS::SETPOINT SUM 1							
189	59	::SETUP PARAMETERS::SETPOINT SUM 1::RATIO 0	1	1		-3	3	RECFG	RW
190	5a	::SETUP PARAMETERS::SETPOINT SUM 1::RATIO 1	1	1		-3	3	RECFG	RW
191	5b	::SETUP PARAMETERS::SETPOINT SUM 1::SIGN 0	POS	>0001	NEG; POS;	0	1	RECFG	RW
192	5c	::SETUP PARAMETERS::SETPOINT SUM 1::SIGN 1	POS	>0001	NEG; POS;	0	1	RECFG	RW
193	5d	::SETUP PARAMETERS::SETPOINT SUM 1::DIVIDER 0	1	1		-3	3	RECFG	RW
194	5e	::SETUP PARAMETERS::SETPOINT SUM 1::DIVIDER 1	1	1		-3	3	RECFG	RW
195	5f	::SETUP PARAMETERS::SETPOINT SUM 1::LIMIT	100.00%	100		0	300	RECFG	RW
196	5g	::SETUP PARAMETERS::SETPOINT SUM 1::INPUT 0	0.00%	0		-100	100	RECFG	RW
197	5h	::SETUP PARAMETERS::SETPOINT SUM 1::INPUT 1	0.00%	0		-100	100	RECFG	RW
198	5i	::SETUP PARAMETERS::SETPOINT SUM 1::INPUT 2	0.00%	0		-100	100	RECFG	RW
199	5j	::PASSWORD							
200	5k	::PASSWORD::ENTER PASSWORD	0x0000	>0000		0	65535	RECFG	RW
201	5l	::PASSWORD::CHANGE PASSWORD	0x0000	0		0	65535	RECFG	RW
202	5m	::ALARM STATUS							
203	5n	::ALARM STATUS::HEALTH STORE	0x0000	>0000		0	65535	NOCFG	RO
204	5o	::MENUS							
205	5p	::MENUS::FULL MENUS	TRUE	>0001	FALSE; TRUE;	0	1	NOCFG	RW

Tag	Mn	Text	Defau	EIASCI	Enum	Min	Max	CFG	RO
206	5q	::MENUS::MENU DELAY	0	0		0	10000	NOCFG	RW
207	5r	::MENUS::DATA DELAY	100	100		20	10000	NOCFG	RW
208	5s	::PARAMETER SAVE	UP TO ACTION	>0000	UP TO ACTION; WORKING;	0	0.01	RECFG	RW
209	5t	::PARAMETER SAVE::SAVE (U/D)							
210	5u	::SERIAL LINKS							
211	5v	::SERIAL LINKS::PORT P3::P3 TAG LIST							
212	5w	::SERIAL LINKS::PORT P3::P3 TAG LIST::TAG 1	7	7		0	800	RECFG	RW
213	5x	No Text	0	0		0	800	RECFG	RW
214	5y	No Text	0	0		0	800	RECFG	RW
215	5z	No Text	0	0		0	800	RECFG	RW
216	60	No Text	0	0		0	800	RECFG	RW
217	61	::ALARM STATUS::HEALTH WORD	0x0000	>0000		0	65535	NOCFG	RO
218	62	::ALARM STATUS::FIRST ALARM	0x0000	>0000		0	65535	NOCFG	RO
219	63	::ALARM STATUS::HEALTH INHIBIT	0x0000	>0000		0	65535	NOCFG	RW
220	64	No Text	0	0		0	65535	RECFG	RO
221	65	::SERIAL LINKS::PORT P3::MEMORY DUMP	FALSE	>0000	FALSE; TRUE;	0	1	RECFG	RW
222	66	::SERIAL LINKS::EI ASCII							
223	67	::SERIAL LINKS::EI ASCII::GROUP ID (GID)	0	0		0	7	RECFG	RW
224	68	::SERIAL LINKS::EI ASCII::UNIT ID (UID)	0	0		0	15	RECFG	RW
225	69	::SERIAL LINKS::PORT P1							
226	6a	::SYSTEM::SOFTWARE INFO::P1 VERSION	NOT PRESENT	10312		0	0	NOCFG	RO
227	6b	::SERIAL LINKS::PORT P1::P1 MODE	EI ASCII	10	DISABLED; EI ASCII; FIELD BUS;	0	11	NOCFG	RW
228	6c	::SERIAL LINKS::PORT P1::P1 BAUD RATE	9600	5	300; 600; 1200; 2400; 4800; 9600; 19200; 38400; 57600;	8		NOCFG	RW
229	6d	::SERIAL LINKS::PORT P3::ERROR REPORT	0x0000	>0000		0	65535	RECFG	RW
230	6e	::SERIAL LINKS::EI ASCII::OPTION ADDRESS	0	0		0	30000	RECFG	RW
231	6f	No Text							
232	6g	::SERIAL LINKS::5703 SUPPORT							
233	6h	::SERIAL LINKS::5703 SUPPORT::SETPT. RATIO	1	1		-3	3	RECFG	RW
234	6i	::SERIAL LINKS::5703 SUPPORT::INVERT SETPOINT	FALSE	>0000	FALSE; TRUE;	0	1	RECFG	RW
235	6j	::SERIAL LINKS::5703 SUPPORT::SCALED INPUT	0.00%	0		-300	300	RECFG	RW
236	6k	::SERIAL LINKS::5703 SUPPORT::OUTPUT	0.00%	0		-300	300	RECFG	RW
237	6l	::SERIAL LINKS::PORT P3::P3 MODE	EI ASCII	6	DISABLED; 5703 MASTER; 5703 SLAVE; FIELD BUS ; TAG LIST NEWPORT; CO-PROCESSOR; EI ASCII;	0	6	NOCFG	RW
238	6m	::SERIAL LINKS::PORT P3::DUMP MMI (TX)	UP TO ACTION	>0000	UP TO ACTION; WORKING;	0	1	RECFG	RW
239	6n	::SERIAL LINKS::PORT P3::UDP XFER (RX)	UP TO ACTION	>0000	UP TO ACTION; WORKING;	0	0.01	RECFG	RW
240	6o	::SERIAL LINKS::PORT P3::UDP XFER (TX)	UP TO ACTION	>0000	UP TO ACTION; WORKING;	0	0.01	RECFG	RW
241	6p	::SERIAL LINKS::PORT P3::P3 BAUD RATE	9600	5	300; 600; 1200; 2400; 4800; 9600; 19200;	6		NOCFG	RW
242	6q	::SYSTEM							
243	6r	::SYSTEM::SOFTWARE INFO							
244	6s	::SYSTEM::CONFIGURE I/O							
245	6t	::SYSTEM::CONFIGURE I/O::CONFIGURE ENABLE	FALSE	>0000	FALSE; TRUE;	0	1	RECFG	RI
246	6u	::SYSTEM::CONFIGURE I/O::ANALOG INPUTS							
247	6v	::SYSTEM::CONFIGURE I/O::ANALOG INPUTS::ANIN 1 (C3)							
248	6w	::SYSTEM::CONFIGURE I/O::ANALOG INPUTS::ANIN 1 (C3)::CALIBRATION	100.00%	100		-300	300	RECFG	RW
249	6x	::SYSTEM::CONFIGURE I/O::ANALOG INPUTS::ANIN 1 (C3)::MAX VALUE	100.00%	100		-300	300	RECFG	RW
250	6y	::SYSTEM::CONFIGURE I/O::ANALOG INPUTS::ANIN 1 (C3)::MIN VALUE	-100.00%	-100		-300	300	RECFG	RW
251	6z	::SYSTEM::CONFIGURE I/O::ANALOG INPUTS::ANIN 1 (C3)::DESTINATION TAG	6	0		0	800	RECFG	RI
252	70	::SETUP PARAMETERS::SPEED LOOP::ZERO SPEED::ZERO SPEED LEVEL	0.50%	0.5		0	100	RECFG	RW
253	71	::SETUP PARAMETERS::S-RAMP::ACCEL O/P	0	0		-300	300	NOCFG	RO
254	72	::SETUP PARAMETERS::S-RAMP::OVERSHOOT THRESH	5.00%	5		0	100	RECFG	RW
255	73	::SYSTEM::CONFIGURE I/O::ANALOG INPUTS::ANIN 3 (F2)							
256	74	::SYSTEM::CONFIGURE I/O::ANALOG INPUTS::ANIN 3 (F2)::CALIBRATION	100.00%	100		-300	300	RECFG	RW
257	75	::SYSTEM::CONFIGURE I/O::ANALOG INPUTS::ANIN 3 (F2)::MAX VALUE	100.00%	100		-300	300	RECFG	RW
258	76	::SYSTEM::CONFIGURE I/O::ANALOG INPUTS::ANIN 3 (F2)::MIN VALUE	-100.00%	-100		-300	300	RECFG	RW
259	77	::SYSTEM::CONFIGURE I/O::ANALOG INPUTS::ANIN 3 (F2)::DESTINATION TAG	6	0		0	800	RECFG	RI
260	78	::SYSTEM::CONFIGURE I/O::ANALOG INPUTS::ANIN 4 (F3)							
261	79	::SYSTEM::CONFIGURE I/O::ANALOG INPUTS::ANIN 4 (F3)::CALIBRATION	100.00%	100		-300	300	RECFG	RW
262	7a	::SYSTEM::CONFIGURE I/O::ANALOG INPUTS::ANIN 4 (F3)::MAX VALUE	100.00%	100		-300	300	RECFG	RW
263	7b	::SYSTEM::CONFIGURE I/O::ANALOG INPUTS::ANIN 4 (F3)::MIN VALUE	-100.00%	-100		-300	300	RECFG	RW
264	7c	::SYSTEM::CONFIGURE I/O::ANALOG INPUTS::ANIN 4 (F3)::DESTINATION TAG	6	0		0	800	RECFG	RI
265	7d	::SYSTEM::CONFIGURE I/O::ANALOG INPUTS::ANIN 5 (F4)							
266	7e	::SYSTEM::CONFIGURE I/O::ANALOG INPUTS::ANIN 5 (F4)::CALIBRATION	100.00%	100		-300	300	RECFG	RW
267	7f	::SYSTEM::CONFIGURE I/O::ANALOG INPUTS::ANIN 5 (F4)::MAX VALUE	100.00%	100		-300	300	RECFG	RW
268	7g	::SYSTEM::CONFIGURE I/O::ANALOG INPUTS::ANIN 5 (F4)::MIN VALUE	-100.00%	-100		-300	300	RECFG	RW
269	7h	::SYSTEM::CONFIGURE I/O::ANALOG INPUTS::ANIN 5 (F4)::DESTINATION TAG	6	0		0	800	RECFG	RI
270	7i	::SYSTEM::CONFIGURE I/O::ANALOG OUTPUTS							
271	7j	::SYSTEM::CONFIGURE I/O::ANALOG OUTPUTS::ANOUT 1 (C5)							

Tag	Mn	Text	Defau	EIASCI	Enum	Min	Max	CFG	RO
272	7k	::SYSTEM::CONFIGURE I/O::ANALOG OUTPUTS::ANOUT 1 (C5)::	% TO GET 100.00%	100		-300	300	RECFG	RW
273	7l	::SYSTEM::CONFIGURE I/O::ANALOG OUTPUTS::ANOUT 1 (C5)::	SOURCE TAG 7	7		0	10000	RECFG	RW
274	7m	::SYSTEM::CONFIGURE I/O::ANALOG OUTPUTS::ANOUT 2 (F5)							
275	7n	::SYSTEM::CONFIGURE I/O::ANALOG OUTPUTS::ANOUT 2 (F5)::	% TO GET 150.00%	150		-300	300	RECFG	RW
276	7o	::SYSTEM::CONFIGURE I/O::ANALOG OUTPUTS::ANOUT 2 (F5)::	SOURCE TAG 9	9		0	10000	RECFG	RW
277	7p	::SYSTEM::CONFIGURE I/O::DIGITAL INPUTS							
278	7q	::SYSTEM::CONFIGURE I/O::DIGITAL INPUTS::DIGIN 1 (E2)							
279	7r	::SYSTEM::CONFIGURE I/O::DIGITAL INPUTS::DIGIN 1 (E2)::	VALUE FOR TRUE 0.01%	0.01		-300	300	RECFG	RW
280	7s	::SYSTEM::CONFIGURE I/O::DIGITAL INPUTS::DIGIN 1 (E2)::	VALUE FOR FALSE 0.00%	0		-300	300	RECFG	RW
281	7t	::SYSTEM::CONFIGURE I/O::DIGITAL INPUTS::DIGIN 1 (E2)::	DESTINATION TAG 0	0		0	800	RECFG	RI
282	7u	::SYSTEM::CONFIGURE I/O::DIGITAL INPUTS::DIGIN 2 (E3)							
283	7v	::SYSTEM::CONFIGURE I/O::DIGITAL INPUTS::DIGIN 2 (E3)::	VALUE FOR TRUE 0.01%	0.01		-300	300	RECFG	RW
284	7w	::SYSTEM::CONFIGURE I/O::DIGITAL INPUTS::DIGIN 2 (E3)::	VALUE FOR FALSE 0.00%	0		-300	300	RECFG	RW
285	7x	::SYSTEM::CONFIGURE I/O::DIGITAL INPUTS::DIGIN 2 (E3)::	DESTINATION TAG 0	0		0	800	RECFG	RI
286	7y	::SYSTEM::CONFIGURE I/O::DIGITAL INPUTS::DIGIN 3 (E4)							
287	7z	::SYSTEM::CONFIGURE I/O::DIGITAL INPUTS::DIGIN 3 (E4)::	VALUE FOR TRUE 0.01%	0.01		-300	300	RECFG	RW
288	80	::SYSTEM::CONFIGURE I/O::DIGITAL INPUTS::DIGIN 3 (E4)::	VALUE FOR FALSE 0.00%	0		-300	300	RECFG	RW
289	81	::SYSTEM::CONFIGURE I/O::DIGITAL INPUTS::DIGIN 3 (E4)::	DESTINATION TAG 0	0		0	800	RECFG	RI
290	82	::SYSTEM::CONFIGURE I/O::DIGITAL OUTPUTS							
291	83	::SYSTEM::CONFIGURE I/O::DIGITAL OUTPUTS::DIGOUT 1 (E6)							
292	84	::SYSTEM::CONFIGURE I/O::DIGITAL OUTPUTS::DIGOUT 1 (E6)::	THRESHOLD 0.00%	0		-300	300	RECFG	RW
293	85	::SYSTEM::CONFIGURE I/O::DIGITAL OUTPUTS::DIGOUT 1 (E6)::	MODULUS FALSE	>0000	FALSE; TRUE;	0	1	RECFG	RW
294	86	::SYSTEM::CONFIGURE I/O::DIGITAL OUTPUTS::DIGOUT 1 (E6)::	SOURCE TAG 17	17		0	800	RECFG	RW
295	87	::SYSTEM::CONFIGURE I/O::DIGITAL OUTPUTS::DIGOUT 2 (E7)							
296	88	::SYSTEM::CONFIGURE I/O::DIGITAL OUTPUTS::DIGOUT 2 (E7)::	THRESHOLD 0.00%	0		-300	300	RECFG	RW
297	89	::SYSTEM::CONFIGURE I/O::DIGITAL OUTPUTS::DIGOUT 2 (E7)::	MODULUS FALSE	>0000	FALSE; TRUE;	0	1	RECFG	RW
298	8a	::SYSTEM::CONFIGURE I/O::DIGITAL OUTPUTS::DIGOUT 2 (E7)::	SOURCE TAG 12	12		0	800	RECFG	RW
299	8b	::SYSTEM::CONFIGURE I/O::DIGITAL OUTPUTS::DIGOUT 3 (E8)							
300	8c	::SYSTEM::CONFIGURE I/O::DIGITAL OUTPUTS::DIGOUT 3 (E8)::	THRESHOLD 0.00%	0		-300	300	RECFG	RW
301	8d	::SYSTEM::CONFIGURE I/O::DIGITAL OUTPUTS::DIGOUT 3 (E8)::	MODULUS TRUE	>0001	FALSE; TRUE;	0	1	RECFG	RW
302	8e	::SYSTEM::CONFIGURE I/O::DIGITAL OUTPUTS::DIGOUT 3 (E8)::	SOURCE TAG 559	559		0	800	RECFG	RW
303	8f	::SYSTEM::CONFIGURE I/O::CONFIGURE 5703							
304	8g	::SYSTEM::CONFIGURE I/O::CONFIGURE 5703::SOURCE TAG	176	176		0	800	RECFG	RW
305	8h	::SYSTEM::CONFIGURE I/O::CONFIGURE 5703::DESTINATION TAG	0	0		0	800	RECFG	RI
306	8i	::SYSTEM::CONFIGURE I/O::BLOCK DIAGRAM							
307	8j	::SYSTEM::CONFIGURE I/O::BLOCK DIAGRAM::RAISE/LOWER DEST	0	0		0	800	RECFG	RI
308	8k	::SYSTEM::CONFIGURE I/O::BLOCK DIAGRAM::RAMP O/P DEST	0	0		0	800	RECFG	RI
309	8l	::SETUP PARAMETERS::ALARMS / SEQ::MOTOR TMP.RST.	50.00%	50		0	200	RECFG	RW
310	8m	::SYSTEM::RESERVED							
311	8n	::SYSTEM::RESERVED::ENG USE ONLY							
312	8o	::SETUP PARAMETERS::REF ENCODER::INPUT SCALING							
313	8p	::MENUS::DATA DELAY::MIN MMI CYCLE TM	200	200		0	30000	RECFG	RW
314	8q	::MENUS::DATA DELAY::MAX MMI CYCLE TM	4000	4000		0	30000	RECFG	RW
315	8r	::SYSTEM::RESERVED::ENG USE ONLY::MISCELLANEOUS::CYCLE TIME	0	0		0	65535	NOCFG	RO
316	8s	::SETUP PARAMETERS::S-RAMP::AT SPEED	FALSE	>0000	FALSE; TRUE;	0	1	NOCFG	RO
317	8t	::SETUP PARAMETERS::S-RAMP							
318	8u	::SERIAL LINKS::PORT P3::P3 TAG LIST::P3 TAG LIST TC	0.10	SECS 0.1		0	300	RECFG	RW
319	8v	::SYSTEM::RESERVED::ENG USE ONLY::MISCELLANEOUS::SPD.FBK. TC	0.10	SECS 0.1		0	300	RECFG	RW
320	8w	::SYSTEM::RESERVED::ENG USE ONLY::MISCELLANEOUS::TORQUE.FBK.TC	0.10	SECS 0.1		0	300	RECFG	RW
321	8x	::SYSTEM::CONFIGURE I/O::DIGITAL OUTPUTS::DIGOUT 1 (E6)::	OFFSET 0.00%	0		-300	300	RECFG	RW
322	8y	::SYSTEM::CONFIGURE I/O::DIGITAL OUTPUTS::DIGOUT 2 (E7)::	OFFSET 0.00%	0		-300	300	RECFG	RW
323	8z	::SYSTEM::CONFIGURE I/O::DIGITAL OUTPUTS::DIGOUT 3 (E8)::	OFFSET 0.00%	0		-300	300	RECFG	RW
324	90	::SYSTEM::CONFIGURE I/O::DIGITAL OUTPUTS::DIGOUT 1 (E6)::	INPUT 0.00%	0		-300	300	RECFG	RW
325	91	::SYSTEM::CONFIGURE I/O::DIGITAL OUTPUTS::DIGOUT 2 (E7)::	INPUT 0.00%	0		-300	300	RECFG	RW
326	92	::SYSTEM::CONFIGURE I/O::DIGITAL OUTPUTS::DIGOUT 3 (E8)::	INPUT 0.00%	0		-300	300	RECFG	RW
327	93	::SYSTEM::CONFIGURE I/O::DIGITAL OUTPUTS::DIGOUT 1 (E6)::	INVERT FALSE	>0000	FALSE; TRUE;	0	1	RECFG	RW
328	94	::SYSTEM::CONFIGURE I/O::DIGITAL OUTPUTS::DIGOUT 2 (E7)::	INVERT FALSE	>0000	FALSE; TRUE;	0	1	RECFG	RW
329	95	::SYSTEM::CONFIGURE I/O::DIGITAL OUTPUTS::DIGOUT 3 (E8)::	INVERT FALSE	>0000	FALSE; TRUE;	0	1	RECFG	RW
330	96	::SYSTEM::CONFIGURE I/O::ANALOG OUTPUTS::ANOUT 1 (C5)::	CALIBRATION 100.00%	100		-200	200	RECFG	RW
331	97	::SYSTEM::CONFIGURE I/O::ANALOG OUTPUTS::ANOUT 2 (F5)::	CALIBRATION 100.00%	100		-200	200	RECFG	RW
332	98	::SYSTEM::CONFIGURE I/O::ANALOG OUTPUTS::ANOUT 1 (C5)::	OFFSET 0.00%	0		-300	300	RECFG	RW
333	99	::SYSTEM::CONFIGURE I/O::ANALOG OUTPUTS::ANOUT 2 (F5)::	OFFSET 0.00%	0		-300	300	RECFG	RW
334	9a	No Text	0	0		0	65535	RECFG	RO
335	9b	::SYSTEM::CONFIGURE I/O::ANALOG OUTPUTS::ANOUT 1 (C5)::	MODULUS FALSE	>0000	FALSE; TRUE;	0	1	RECFG	RW
336	9c	::SYSTEM::CONFIGURE I/O::ANALOG OUTPUTS::ANOUT 2 (F5)::	MODULUS FALSE	>0000	FALSE; TRUE;	0	1	RECFG	RW
337	9d	::SETUP PARAMETERS::REF ENCODER::PHASE::POS CALC ENABLE	FALSE	>0000	FALSE; TRUE;	0	1	RECFG	RW
338	9e	::SETUP PARAMETERS::REF ENCODER::PHASE::POSITION ERROR	0	0		-30000	30000	RECFG	RW
339	9f	::SETUP PARAMETERS::REF ENCODER							
340	9g	::SYSTEM::PEEK DIAGNOSTIC::PEEK TAG	7	7		0	800	RECFG	RI
341	9h	::SYSTEM::CONFIGURE I/O::BLOCK DIAGRAM::POSITION DEST	0	0		0	800	RECFG	RI
342	9i	::SETUP PARAMETERS::REF ENCODER::PHASE::MAX POSITION ERR	100	100		-300	300	RECFG	RW

Tag	Mn	Text	Defau	EIASCI	Enum	Min	Max	CFG	RO
343	9j	::SETUP PARAMETERS::REF ENCODER::INPUT SCALING::REF SCALE A	10000	10000		-30000	30000	RECFG	RW
344	9k	::SETUP PARAMETERS::REF ENCODER::INPUT SCALING::REF SCALE B	10000	10000		-30000	30000	RECFG	RW
345	9l	::SYSTEM::CONFIGURE I/O::BLOCK DIAGRAM::SPT SUM1 OP DEST	0	0		0	800	RECFG	RI
346	9m	::SYSTEM::CONFIGURE I/O::BLOCK DIAGRAM::SPT SUM2 OP DEST	0	0		0	800	RECFG	RI
347	9n	::SYSTEM::CONFIGURE I/O::BLOCK DIAGRAM::SPT SUM3 OP DEST	0	0		0	800	RECFG	RI
348	9o	::SYSTEM::PEEK DIAGNOSTIC							
349	9p	::SYSTEM::PEEK DIAGNOSTIC::PEEK DATA	[0xC000] = 0000	0xC000		0	65535	RECFG	RW
350	9q	::SYSTEM::PEEK DIAGNOSTIC::PEEK SCALE	100.00%	100		-300	300	RECFG	RW
351	9r	::SYSTEM::RESERVED::ENG USE ONLY::MISCELLANEOUS::SYS TIME	0x0000	>0000		0	65535	NOCFG	RO
352	9s	::SETUP PARAMETERS::STOP RATES::READY DELAY	0.000	SECS 0		0	30	RECFG	RW
353	9t	::SETUP PARAMETERS::REF ENCODER::REF.SPEED::MAX SPEED RPM	1500	RPM1500		0	6000	RECFG	RW
354	9u	::SYSTEM::CONFIGURE I/O::ANALOG OUTPUTS::ANOUT 1 (C5): ANOUT 1	0.00%	0		-300	300	RECFG	RW
355	9v	::SYSTEM::CONFIGURE I/O::ANALOG OUTPUTS::ANOUT 2 (F5): ANOUT 2	0.00%	0		-300	300	RECFG	RW
356	9w	::SETUP PARAMETERS::REF ENCODER::REF.SPEED::ENCODER LINES	2048	2048		0	8000	RECFG	RW
357	9x	::SETUP PARAMETERS::REF ENCODER::REF.SPEED::REFSPEED	0.00%	0		-300	300	RECFG	RW
358	9y	::SYSTEM::CONFIGURE I/O::ANALOG INPUTS::ANIN 1 (C3)::OFFSET	0.00%	0		-100	100	RECFG	RW
359	9z	::SETUP PARAMETERS::REF ENCODER::INPUT SCALING::REF ENCODER CNT	0	0		0	65535	RECFG	RO
360	a0	::SYSTEM::CONFIGURE I/O::ANALOG INPUTS::ANIN 3 (F2)::OFFSET	0.00%	0		-100	100	RECFG	RW
361	a1	::SYSTEM::CONFIGURE I/O::ANALOG INPUTS::ANIN 4 (F3)::OFFSET	0.00%	0		-100	100	RECFG	RW
362	a2	::SYSTEM::CONFIGURE I/O::ANALOG INPUTS::ANIN 5 (F4)::OFFSET	0.00%	0		-100	100	RECFG	RW
363	a3	::SETUP PARAMETERS::SETPOINT SUM 2							
364	a4	::SETUP PARAMETERS::SETPOINT SUM 2::RATIO 0	1	1		-3	3	RECFG	RW
365	a5	::SETUP PARAMETERS::SETPOINT SUM 2::RATIO 1	1	1		-3	3	RECFG	RW
366	a6	::SETUP PARAMETERS::SETPOINT SUM 2::SIGN 0	POS	>0001	NEG; POS;	0	1	RECFG	RW
367	a7	::SETUP PARAMETERS::SETPOINT SUM 2::SIGN 1	POS	>0001	NEG; POS;	0	1	RECFG	RW
368	a8	::SETUP PARAMETERS::SETPOINT SUM 2::DIVIDER 0	1	1		-3	3	RECFG	RW
369	a9	::SETUP PARAMETERS::SETPOINT SUM 2::DIVIDER 1	1	1		-3	3	RECFG	RW
370	aa	::SETUP PARAMETERS::SETPOINT SUM 2::LIMIT	100.00%	100		0	300	RECFG	RW
371	ab	::SETUP PARAMETERS::SETPOINT SUM 2::INPUT 0	0.00%	0		-100	100	RECFG	RW
372	ac	::SETUP PARAMETERS::SETPOINT SUM 2::INPUT 1	0.00%	0		-100	100	RECFG	RW
373	ad	::SETUP PARAMETERS::SETPOINT SUM 2::INPUT 2	0.00%	0		-100	100	RECFG	RW
374	ae	::SETUP PARAMETERS::SETPOINT SUM 3							
375	af	::SETUP PARAMETERS::SETPOINT SUM 3::RATIO 0	1	1		-3	3	RECFG	RW
376	ag	::SETUP PARAMETERS::SETPOINT SUM 3::RATIO 1	1	1		-3	3	RECFG	RW
377	ah	::SETUP PARAMETERS::SETPOINT SUM 3::SIGN 0	POS	>0001	NEG; POS;	0	1	RECFG	RW
378	ai	::SETUP PARAMETERS::SETPOINT SUM 3::SIGN 1	POS	>0001	NEG; POS;	0	1	RECFG	RW
379	aj	::SETUP PARAMETERS::SETPOINT SUM 3::DIVIDER 0	1	1		-3	3	RECFG	RW
380	ak	::SETUP PARAMETERS::SETPOINT SUM 3::DIVIDER 1	1	1		-3	3	RECFG	RW
381	al	::SETUP PARAMETERS::SETPOINT SUM 3::LIMIT	100.00%	100		0	300	RECFG	RW
382	am	::SETUP PARAMETERS::SETPOINT SUM 3::INPUT 0	0.00%	0		-100	100	RECFG	RW
383	an	::SETUP PARAMETERS::SETPOINT SUM 3::INPUT 1	0.00%	0		-100	100	RECFG	RW
384	ao	::SETUP PARAMETERS::SETPOINT SUM 3::INPUT 2	0.00%	0		-100	100	RECFG	RW
385	ap	::SETUP PARAMETERS::SETPOINT SUM 2::SPT SUM O/P 2	0.00%	0		-300	300	NOCFG	RO
386	aq	::SETUP PARAMETERS::SETPOINT SUM 3::SPT SUM O/P 3	0.00%	0		-300	300	NOCFG	RO
387	ar	::SETUP PARAMETERS::HOME							
388	as	::SETUP PARAMETERS::HOME::LINEAR O/P	FALSE	>0000	FALSE; TRUE;	0	1	RECFG	RW
389	at	::SYSTEM::CONFIGURE I/O::BLOCK DIAGRAM::HOME DEST	0	0		0	800	RECFG	RI
390	au	::SYSTEM::CONFIGURE I/O::ANALOG INPUTS::ANIN 1 (C3)::SCALED INPUT	0.00%	0		-300	300	NOCFG	RO
391	av	::SYSTEM::CONFIGURE I/O::ANALOG INPUTS::ANIN 3 (F2)::SCALED INPUT	0.00%	0		-300	300	NOCFG	RO
392	aw	::SYSTEM::CONFIGURE I/O::ANALOG INPUTS::ANIN 4 (F3)::SCALED INPUT	0.00%	0		-300	300	NOCFG	RO
393	ax	::SYSTEM::CONFIGURE I/O::ANALOG INPUTS::ANIN 5 (F4)::SCALED INPUT	0.00%	0		-300	300	NOCFG	RO
394	ay	::SETUP PARAMETERS::HOME::HOME INPUT	0.00%	0		-100	100	RECFG	RW
395	az	::SETUP PARAMETERS::HOME::HOME OUTPUT	0.00%	0		-100	100	NOCFG	RO
396	b0	::SETUP PARAMETERS::HOME::HOMING DISTANCE	2048	2048		0	30000	RECFG	RW
397	b1	::SETUP PARAMETERS::HOME::HOME	FALSE	>0000	FALSE; TRUE;	0	1	RECFG	RW
398	b2	::SETUP PARAMETERS::HOME::1/ENCODER SCALE	4	4		0.01	100	RECFG	RW
399	b3	::CONFIGURE DRIVE::NO.OF POLES	4	4		2	50	NOCFG	RI
400	b4	::SYSTEM::RESERVED::ENG USE ONLY::Id Iq LOOPS							
401	b5	::SYSTEM::RESERVED::ENG USE ONLY::Id Iq LOOPS::Id PROP GAIN	2	2		0	32767	NOCFG	RW
402	b6	::SYSTEM::RESERVED::ENG USE ONLY::Id Iq LOOPS::Id INT GAIN	500	500		0	32767	NOCFG	RW
403	b7	::SYSTEM::RESERVED::ENG USE ONLY::Id Iq LOOPS::MAX Id DEMAND	7500	7500		0	10000	NOCFG	RW
404	b8	::SYSTEM::RESERVED::ENG USE ONLY::Id Iq LOOPS::MIN Id DEMAND	-2000	-2000		-5000	-1	NOCFG	RW
405	b9	::SYSTEM::RESERVED::ENG USE ONLY::Id Iq LOOPS::MAX Id INTEGRAL	7500	7500		0	10000	NOCFG	RW
406	ba	::SYSTEM::RESERVED::ENG USE ONLY::Id Iq LOOPS::MIN Id INTEGRAL	-2000	-2000		-5000	0	NOCFG	RW
407	bb	::SYSTEM::RESERVED::ENG USE ONLY::Id Iq LOOPS::Iq INT GAIN	10000	10000		0	32767	NOCFG	RW
408	bc	::SYSTEM::RESERVED::ENG USE ONLY::Id Iq LOOPS::MAX Iq INTEGRAL	4000	4000		0	5000	NOCFG	RW
409	bd	::SYSTEM::RESERVED::ENG USE ONLY::Id Iq LOOPS::MIN Iq INTEGRAL	-4000	-4000		-5000	0	NOCFG	RW
410	be	::SYSTEM::RESERVED::ENG USE ONLY::MISCELLANEOUS							
411	bf	::SYSTEM::RESERVED::ENG USE ONLY::MISCELLANEOUS::BRAKE THRESHOLD	936	936		0	1023	NOCFG	RW
412	bg	::SYSTEM::RESERVED::ENG USE ONLY::MISCELLANEOUS::MODN INDEX	9000	9000		0	12000	NOCFG	RW
413	bh	::SYSTEM::RESERVED::ENG USE ONLY::MISCELLANEOUS::AD POS THRESHOLD	6	6		0	100	NOCFG	RW

Tag	Mn	Text	Defau	EIASCI	Enum	Min	Max	CFG	RO
414	bi	::SYSTEM::RESERVED::ENG USE ONLY::MISCELLANEOUS::AD NEG THRESHOLD	6	6		0	100	NOCFG	RW
415	bj	::SYSTEM::RESERVED::ENG USE ONLY::Id Iq LOOPS::MAX Id HI word	0	0		0	100	NOCFG	RW
416	bk	::SYSTEM::RESERVED::ENG USE ONLY::Id Iq LOOPS::MIN Id HI word	-1	-1		-1	0	NOCFG	RW
417	bl	::SYSTEM::RESERVED::ENG USE ONLY::TEST FUNCTIONS							
418	bm	::SYSTEM::RESERVED::ENG USE ONLY::TEST FUNCTIONS::SELECT FUNCTION	0	0		0	9	NOCFG	RI
419	bn	::SYSTEM::RESERVED::ENG USE ONLY::TEST FUNCTIONS::SPEED PERIOD	1000	1000		2	32767	RECFG	RW
420	bo	::SYSTEM::RESERVED::ENG USE ONLY::TEST FUNCTIONS::SPEED AMPLITUDE	500	500		0	30000	RECFG	RW
421	bp	::SYSTEM::RESERVED::ENG USE ONLY::TEST FUNCTIONS::SPEED OFFSET	0	0		-11000	11000	RECFG	RW
422	bq	::SYSTEM::RESERVED::ENG USE ONLY::TEST FUNCTIONS::CURRENT PERIOD	40	40		2	10000	RECFG	RW
423	br	::SYSTEM::RESERVED::ENG USE ONLY::TEST FUNCTIONS::CURR AMPLITUDE	200	200		0	5000	RECFG	RW
424	bs	::SYSTEM::RESERVED::ENG USE ONLY::TEST FUNCTIONS::CURRENT OFFSET	0	0		-5000	5000	RECFG	RW
425	bt	::SYSTEM::RESERVED::ENG USE ONLY::TRACE							
426	bu	::SYSTEM::RESERVED::ENG USE ONLY::TRACE::TRACE MODE	1	1		0	2	NOCFG	RI
427	bv	::SYSTEM::RESERVED::ENG USE ONLY::TRACE::PRESET COUNT	0	0		0	65535	NOCFG	RI
428	bw	::SYSTEM::RESERVED::ENG USE ONLY::TRACE::NO OF PASSES	1	1		1	254	NOCFG	RI
429	bx	No Text	FALSE	>0000	FALSE; TRUE;	0	1	NOCFG	RI
430	by	::SYSTEM::RESERVED::ENG USE ONLY::TRACE::TRACE ADDRESS 1	0x0000	>0000		0	65535	NOCFG	RI
431	bz	::SYSTEM::RESERVED::ENG USE ONLY::TRACE::TRACE ADDRESS 2	0x0000	>0000		0	65535	NOCFG	RI
432	c0	::SYSTEM::RESERVED::ENG USE ONLY::TRACE::TRACE ADDRESS 3	0x0000	>0000		0	65535	NOCFG	RI
433	c1	::SYSTEM::RESERVED::ENG USE ONLY::TRACE::TRACE ADDRESS 4	0x0000	>0000		0	65535	NOCFG	RI
434	c2	::SYSTEM::RESERVED::ENG USE ONLY::TRACE::TRACE ADDRESS 5	0x0000	>0000		0	65535	NOCFG	RI
435	c3	::SYSTEM::RESERVED::ENG USE ONLY::TRACE::TRACE ADDRESS 6	0x0000	>0000		0	65535	NOCFG	RI
436	c4	::SYSTEM::RESERVED::ENG USE ONLY::TRACE::TRACE ADDRESS 7	0x0000	>0000		0	65535	NOCFG	RI
437	c5	::SYSTEM::RESERVED::ENG USE ONLY::TRACE::TRACE ADDRESS 8	0x0000	>0000		0	65535	NOCFG	RI
438	c6	No Text	0x0000	>0000		0	65535	NOCFG	RI
439	c7	No Text	0x0000	>0000		0	65535	NOCFG	RI
440	c8	No Text	0x0000	>0000		0	65535	NOCFG	RI
441	c9	No Text	0x0000	>0000		0	65535	NOCFG	RI
442	ca	No Text	0x0000	>0000		0	65535	NOCFG	RI
443	cb	No Text	0x0000	>0000		0	65535	NOCFG	RI
444	cc	No Text	0x0000	>0000		0	65535	NOCFG	RI
445	cd	No Text	0x0000	>0000		0	65535	NOCFG	RI
446	ce	::SYSTEM::RESERVED::ENG USE ONLY::FIELD WK VARS							
447	cf	::SETUP PARAMETERS::REF ENCODER::PHASE::OFFSET MENU::OFFSET	0	0		-30000	30000	RECFG	RW
448	cg	::CONFIGURE DRIVE::BASE FREQUENCY	50	0 Hz 50		0.1	400	NOCFG	RI
449	ch	No Text	0	0		0	65535	RECFG	RO
450	ci	::SYSTEM::CONFIGURE I/O::DIGITAL INPUTS::DIGIN B7 DEST	0	0		0	800	RECFG	RI
451	cj	::SYSTEM::CONFIGURE I/O::DIGITAL INPUTS::DIGIN B6 DEST	0	0		0	800	RECFG	RI
452	ck	::SYSTEM::CONFIGURE I/O::DIGITAL INPUTS::DIGIN B8 DEST	0	0		0	800	RECFG	RI
453	cl	::CONFIGURE DRIVE::MAG CURRENT %	30.00%	30		0	90	NOCFG	RI
454	cm	::SYSTEM::RESERVED::ENG USE ONLY::FIELD WK VARS::MAG I SCALE 0	100.00%	100		100	100	NOCFG	RI
455	cn	::SYSTEM::RESERVED::ENG USE ONLY::FIELD WK VARS::MAG I SCALE 1	77.00%	77		0	100	NOCFG	RI
456	co	::SYSTEM::RESERVED::ENG USE ONLY::FIELD WK VARS::MAG I SCALE 2	63.00%	63		0	100	NOCFG	RI
457	cp	::SYSTEM::RESERVED::ENG USE ONLY::FIELD WK VARS::MAG I SCALE 3	50.00%	50		0	100	NOCFG	RI
458	cq	::CONFIGURE DRIVE::ROTOR TIME CONST	100.0 mSECS	100		12.8	3000	RECFG	RI
459	cr	::SYSTEM::RESERVED::ENG USE ONLY::FIELD WK VARS::MAG I SCALE 5	35.00%	35		0	100	NOCFG	RI
460	cs	::SYSTEM::RESERVED::ENG USE ONLY::FIELD WK VARS::MAG I SCALE 6	30.00%	30		0	100	NOCFG	RI
461	ct	::SYSTEM::RESERVED::ENG USE ONLY::FIELD WK VARS::MAG I SCALE 7	25.00%	25		0	100	NOCFG	RI
462	cu	::SYSTEM::RESERVED::ENG USE ONLY::FIELD WK VARS::MAG I SCALE 8	20.00%	20		0	100	NOCFG	RI
463	cv	::SYSTEM::CO-PROCESSOR::	0.00%	0		-100	100	RECFG	RW
464	cw	::SYSTEM::CO-PROCESSOR::	0.00%	0		-100	100	RECFG	RW
465	cx	::SYSTEM::CO-PROCESSOR::	0.00%	0		-100	100	RECFG	RW
466	cy	::SYSTEM::CO-PROCESSOR::	0.00%	0		-100	100	RECFG	RW
467	cz	::SYSTEM::CO-PROCESSOR::	0.00%	0		-100	100	RECFG	RW
468	d0	::SYSTEM::CO-PROCESSOR::	0.00%	0		-100	100	RECFG	RW
469	d1	::SYSTEM::CO-PROCESSOR::	0.00%	0		-100	100	RECFG	RW
470	d2	::SYSTEM::CO-PROCESSOR::	0.00%	0		-100	100	RECFG	RW
471	d3	::SYSTEM::CO-PROCESSOR::	0.00%	0		-100	100	RECFG	RW
472	d4	::SYSTEM::CO-PROCESSOR::	0.00%	0		-100	100	RECFG	RW
473	d5	::SYSTEM::CO-PROCESSOR::	FALSE	>0000	FALSE; TRUE;	0	1	RECFG	RW
474	d6	::SYSTEM::CO-PROCESSOR::	FALSE	>0000	FALSE; TRUE;	0	1	RECFG	RW
475	d7	::SYSTEM::CO-PROCESSOR::	FALSE	>0000	FALSE; TRUE;	0	1	RECFG	RW
476	d8	::SYSTEM::CO-PROCESSOR::	FALSE	>0000	FALSE; TRUE;	0	1	RECFG	RW
477	d9	::SYSTEM::CO-PROCESSOR::	FALSE	>0000	FALSE; TRUE;	0	1	RECFG	RW
478	da	::SYSTEM::CO-PROCESSOR::	FALSE	>0000	FALSE; TRUE;	0	1	RECFG	RW
479	db	::SYSTEM::CO-PROCESSOR							
480	dc	::SETUP PARAMETERS::TORQUE LOOP::TERMINAL VOLTS	0	VOLTS 0		-10000	10000	NOCFG	RO
481	dd	::SETUP PARAMETERS::AUTOTUNE							
482	de	::CONFIGURE DRIVE::AUTOTUNE FLAG	FALSE	>0000	FALSE; TRUE;	0	1	RECFG	RW
483	df	::SETUP PARAMETERS::AUTOTUNE::MAG I AUTOTUNE	TRUE	>0001	FALSE; TRUE;	0	1	RECFG	RW
484	dg	::SETUP PARAMETERS::AUTOTUNE::SET Tr < RTD SPD	TRUE	>0001	FALSE; TRUE;	0	1	RECFG	RW

Tag	Mn	Text	Defau	EIASCI	Enum	Min	Max	CFG	RO
485	dh	::SYSTEM::RESERVED::ENG USE ONLY::AUTOTUNE MISC							
486	di	::CONFIGURE DRIVE::MOTOR VOLTS	415 VOLTS	415		0	1000	RECFG	RW
487	dj	::SYSTEM::RESERVED::ENG USE ONLY::AUTOTUNE MISC::kimr_int	1000	1000		0	32000	RECFG	RW
488	dk	::SYSTEM::RESERVED::ENG USE ONLY::AUTOTUNE MISC::AUTO RAMP INCRMT	2	2		1	50	RECFG	RW
489	dl	::SYSTEM::RESERVED::ENG USE ONLY::AUTOTUNE MISC::LINK V FILT GAIN	500	500		0	32000	RECFG	RW
490	dm	::SYSTEM::RESERVED::ENG USE ONLY::AUTOTUNE MISC::TERM V FILT GAIN	500	500		0	32000	RECFG	RW
491	dn	::SYSTEM::RESERVED::ENG USE ONLY::AUTOTUNE MISC::TERM V FLTGN DSP	50	50		0	32000	RECFG	RW
492	do	::SYSTEM::RESERVED::ENG USE ONLY::AUTOTUNE MISC::AUTOCAL MAX RPM	0 RPM	0		-30000	30000	NOCFG	RO
493	dp	::SYSTEM::RESERVED::ENG USE ONLY::AUTOTUNE MISC::LOAD FACTOR @ 5%	95.00%	95		50	100	RECFG	RW
494	dq	::SYSTEM::RESERVED::ENG USE ONLY::AUTOTUNE MISC::LOAD FACTOR @ 20%	90.00%	90		50	100	RECFG	RW
495	dr	::SYSTEM::RESERVED::ENG USE ONLY::MISCELLANEOUS::IFB ADJUST	115.00%	115		50	150	RECFG	RI
496	ds	No Text	0.00%	0		0	100	RECFG	RW
497	dt	::SYSTEM::RESERVED::ENG USE ONLY::MISCELLANEOUS::TICK LENGTH	0	0		0	65.535	NOCFG	RO
498	du	::SETUP PARAMETERS::REF ENCODER::INPUT SCALING::FBK.SCALE A	10000	10000		-30000	30000	RECFG	RW
499	dv	::SETUP PARAMETERS::REF ENCODER::INPUT SCALING::FBK.SCALE B	10000	10000		-30000	30000	RECFG	RW
500	dw	::SETUP PARAMETERS::PID::ERROR CALC::ERROR O/P	0.00%	0		-300	300	NOCFG	RO
501	dx	::SETUP PARAMETERS::OP-STATION							
502	dy	::SETUP PARAMETERS::OP-STATION::START UP VALUES							
503	dz	::SETUP PARAMETERS::OP-STATION::START UP VALUES::SETPOINT	0.00%	0		0	100	RECFG	RW
504	e0	::SETUP PARAMETERS::OP-STATION::START UP VALUES::REV DIRECTION	FALSE	>0000	FALSE; TRUE;	0	1	RECFG	RW
505	e1	::SETUP PARAMETERS::OP-STATION::START UP VALUES::PROGRAM	FALSE	>0000	FALSE; TRUE;	0	1	RECFG	RW
506	e2	::SETUP PARAMETERS::OP-STATION::START UP VALUES::LOCAL	FALSE	>0000	FALSE; TRUE;	0	1	RECFG	RW
507	e3	::SETUP PARAMETERS::OP-STATION::SET UP::SETPOINT	0.00%	0		0	100	RECFG	RW
508	e4	::SYSTEM::CONFIGURE I/O::DIGITAL INPUTS::DIGIN 4 (E5)::OUTPUT	0.00%	0		-300	300	RECFG	RW
509	e5	::SETUP PARAMETERS::OP-STATION::LOCAL RAMP::RAMP OUTPUT	0.00%	0		-100	100	NOCFG	RO
510	e6	::SETUP PARAMETERS::OP-STATION::LOCAL RAMP							
511	e7	::SETUP PARAMETERS::OP-STATION::LOCAL RAMP::RAMP ACCEL TIME	10.0 SECS	10		0	600	RECFG	RW
512	e8	::SETUP PARAMETERS::OP-STATION::LOCAL RAMP::RAMP DECEL TIME	10.0 SECS	10		0	600	RECFG	RW
513	e9	No Text	0	0		0	65535	RECFG	RO
514	ea	No Text	0	0		0	65535	RECFG	RO
515	eb	No Text	0	0		0	65535	RECFG	RO
516	ec	::SETUP PARAMETERS::OP-STATION::LOCAL RAMP::% S-RAMP	0.00%	0		0	100	RECFG	RW
517	ed	No Text	1.00%	1		-100	100	RECFG	RW
518	ee	No Text	TRUE	>0001	FALSE; TRUE;	0	1	RECFG	RW
519	ef	No Text	FALSE	>0000	FALSE; TRUE;	0	1	RECFG	RW
520	eg	No Text	0	0		0	65535	RECFG	RO
521	eh	::SYSTEM::CONFIGURE I/O::DIGITAL INPUTS::DIGIN 4 (E5)::DIGIN 4 (E5)	FALSE	>0000	FALSE; TRUE;	0	1	NOCFG	RO
522	ei	::SYSTEM::CONFIGURE I/O::DIGITAL INPUTS::DIGIN 4 (E5)							
523	ej	::SYSTEM::CONFIGURE I/O::DIGITAL INPUTS::DIGIN 4 (E5)::VALUE FOR TRUE	0.01%	0.01		-300	300	RECFG	RW
524	ek	::SYSTEM::CONFIGURE I/O::DIGITAL INPUTS::DIGIN 4 (E5)::VALUE FOR FALSE	0.00%	0		-300	300	RECFG	RW
525	el	::SYSTEM::CONFIGURE I/O::DIGITAL INPUTS::DIGIN 4 (E5)::DESTINATION TAG	0	0		0	800	RECFG	RI
526	em	No Text	0.10 SECS	0.1		0.01	60	RECFG	RW
527	en	::SYSTEM::CONFIGURE I/O::DIGITAL INPUTS::DIGIN 1 (E2)::OUTPUT	0.00%	0		-300	300	RECFG	RW
528	eo	::SYSTEM::CONFIGURE I/O::DIGITAL INPUTS::DIGIN 2 (E3)::OUTPUT	0.00%	0		-300	300	RECFG	RW
529	ep	::SYSTEM::CONFIGURE I/O::DIGITAL INPUTS::DIGIN 3 (E4)::OUTPUT	0.00%	0		-300	300	RECFG	RW
530	eq	::SETUP PARAMETERS::PID							
531	er	::SETUP PARAMETERS::PID::DERIVATIVE TC	0.000 SECS	0		0	10	RECFG	RW
532	es	::SETUP PARAMETERS::PID::ERROR CALC::DIVIDER 1	1	1		-3	3	RECFG	RW
533	et	::SETUP PARAMETERS::PID::ERROR CALC::DIVIDER 2	1	1		-3	3	RECFG	RW
534	eu	::SETUP PARAMETERS::PID::ENABLE	TRUE	>0001	FALSE; TRUE;	0	1	RECFG	RW
535	ev	::SETUP PARAMETERS::PID::FILTER TC	0.100 SECS	0.1		0	10	RECFG	RW
536	ew	::SETUP PARAMETERS::PID::ERROR CALC::INPUT 1	0.00%	0		-300	300	RECFG	RW
537	ex	::SETUP PARAMETERS::PID::ERROR CALC::INPUT 2	0.00%	0		-300	300	RECFG	RW
538	ey	::SETUP PARAMETERS::PID::INT.DEFEAT	FALSE	>0000	FALSE; TRUE;	0	1	RECFG	RW
539	ez	::SETUP PARAMETERS::PID::INT.TIME CONST.	5.00 SECS	5		0	100	RECFG	RW
540	f0	::SETUP PARAMETERS::PID::PROFILER::MIN PROFILE GAIN	20.00%	20		0	100	RECFG	RW
541	f1	::SETUP PARAMETERS::PID::PROFILER::MODE	0	0		0	4	RECFG	RW
542	f2	::SETUP PARAMETERS::PID::NEGATIVE LIMIT	-100.00%	-100		-100	0	RECFG	RW
543	f3	::SETUP PARAMETERS::PID::O/P SCALER(TRIM)	1	1		-3	3	RECFG	RW
544	f4	::SETUP PARAMETERS::PID::CLAMPED	TRUE	>0001	FALSE; TRUE;	0	1	RECFG	RW
545	f5	::SETUP PARAMETERS::PID::INPUT	0.00%	0		-300	300	RECFG	RW
546	f6	::SETUP PARAMETERS::PID::OUTPUT	0.00%	0		-300	300	NOCFG	RO
547	f7	::SETUP PARAMETERS::PID::POSITIVE LIMIT	100.00%	100		0	100	RECFG	RW
548	f8	::SETUP PARAMETERS::PID::PROFILER::PROFILED GAIN	0	0		0	100	RECFG	RW
549	f9	::SETUP PARAMETERS::PID::PROP.GAIN	1	1		0	100	RECFG	RW
550	fa	::SETUP PARAMETERS::PID::ERROR CALC::RATIO 1	1	1		-3	3	RECFG	RW
551	fb	::SETUP PARAMETERS::PID::ERROR CALC::RATIO 2	1	1		-3	3	RECFG	RW
552	fc	::SYSTEM::CONFIGURE I/O::BLOCK DIAGRAM::Pid O/P DEST	0	0		0	800	RECFG	RI
553	fd	::SETUP PARAMETERS::PID::ERROR CALC::LIMIT	100.00%	100		0	300	RECFG	RW
554	fe	::SETUP PARAMETERS::PID::PROFILER::PROFILE INPUT	0.00%	0		0	100	RECFG	RW
555	ff	::SETUP PARAMETERS::PID::PROFILER::PROFILE MININPUT	0.00%	0		0	100	RECFG	RW

Tag	Mn	Text	Defau	EIASCI	Enum	Min	Max	CFG	RO
556	fg	::SYSTEM::CONFIGURE I/O::BLOCK DIAGRAM::Pid ERROR DEST	0	0		0	800	RECFG	RI
557	fh	::SETUP PARAMETERS::PID::ERROR CALC							
558	fi	::SETUP PARAMETERS::PID::PROFILER							
559	fj	::SETUP PARAMETERS::ALARMS / SEQ::READY	FALSE	>0000	FALSE; TRUE;	0	1	NOCFG	RO
560	fk	::SYSTEM::CONFIGURE I/O::INTERNAL LINKS::LINK 5 SOURCE	0	0		0	800	RECFG	RI
561	fl	::SYSTEM::CONFIGURE I/O::INTERNAL LINKS::LINK 5 DEST	0	0		0	800	RECFG	RI
562	fm	::SYSTEM::CONFIGURE I/O::INTERNAL LINKS::LINK 6 SOURCE	0	0		0	800	RECFG	RI
563	fn	::SYSTEM::CONFIGURE I/O::INTERNAL LINKS::LINK 6 DEST	0	0		0	800	RECFG	RI
564	fo	::SYSTEM::CONFIGURE I/O::INTERNAL LINKS::LINK 7 SOURCE	0	0		0	800	RECFG	RI
565	fp	::SYSTEM::CONFIGURE I/O::INTERNAL LINKS::LINK 7 DEST	0	0		0	800	RECFG	RI
566	fq	::SYSTEM::CONFIGURE I/O::INTERNAL LINKS::LINK 8 SOURCE	0	0		0	800	RECFG	RI
567	fr	::SYSTEM::CONFIGURE I/O::INTERNAL LINKS::LINK 8 DEST	0	0		0	800	RECFG	RI
568	fs	::SYSTEM::CONFIGURE I/O::INTERNAL LINKS::LINK 9 SOURCE	0	0		0	800	RECFG	RI
569	ft	::SYSTEM::CONFIGURE I/O::INTERNAL LINKS::LINK 9 DEST	0	0		0	800	RECFG	RI
570	fu	::SYSTEM::CONFIGURE I/O::INTERNAL LINKS::LINK 10 SOURCE	0	0		0	800	RECFG	RI
571	fv	::SYSTEM::CONFIGURE I/O::INTERNAL LINKS::LINK 10 DEST	0	0		0	800	RECFG	RI
572	fw	::SYSTEM::CONFIGURE I/O::INTERNAL LINKS::LINK 11 SOURCE	0	0		0	800	RECFG	RI
573	fx	::SYSTEM::CONFIGURE I/O::INTERNAL LINKS::LINK 11 DEST	0	0		0	800	RECFG	RI
574	fy	::SYSTEM::CONFIGURE I/O::INTERNAL LINKS::LINK 12 SOURCE	0	0		0	800	RECFG	RI
575	fz	::SYSTEM::CONFIGURE I/O::INTERNAL LINKS::LINK 12 DEST	0	0		0	800	RECFG	RI
576	g0	::SYSTEM::CONFIGURE I/O::INTERNAL LINKS::LINK 13 SOURCE	0	0		0	800	RECFG	RI
577	g1	::SYSTEM::CONFIGURE I/O::INTERNAL LINKS::LINK 13 DEST	0	0		0	800	RECFG	RI
578	g2	::SYSTEM::CONFIGURE I/O::INTERNAL LINKS::LINK 14 SOURCE	0	0		0	800	RECFG	RI
579	g3	::SYSTEM::CONFIGURE I/O::INTERNAL LINKS::LINK 14 DEST	0	0		0	800	RECFG	RI
580	g4	::SYSTEM::CONFIGURE I/O::INTERNAL LINKS::LINK 15 SOURCE	0	0		0	800	RECFG	RI
581	g5	::SYSTEM::CONFIGURE I/O::INTERNAL LINKS::LINK 15 DEST	0	0		0	800	RECFG	RI
582	g6	::SYSTEM::CONFIGURE I/O::INTERNAL LINKS::LINK 16 SOURCE	0	0		0	800	RECFG	RI
583	g7	::SYSTEM::CONFIGURE I/O::INTERNAL LINKS::LINK 16 DEST	0	0		0	800	RECFG	RI
584	g8	::SERIAL LINKS::5703 SUPPORT::RAW INPUT	0.00%	0		-300	300	RECFG	RW
585	g9	::SETUP PARAMETERS::TORQUE LOOP::TORQUE LIMITS::CURRENT LIMIT	150.00%	150		50	150	RECFG	RW
586	ga	::SYSTEM::RESERVED::ENG USE ONLY::FIELD WK VARS::MAG I SCALE 4	40.00%	40		0	100	NOCFG	RI
587	gb	::SYSTEM::RESERVED::ENG USE ONLY::FIELD WK VARS::TR SCALE 0	100.00%	100		100	100	NOCFG	RI
588	gc	::SYSTEM::RESERVED::ENG USE ONLY::FIELD WK VARS::TR SCALE 1	100.00%	100		20	300	NOCFG	RI
589	gd	::SYSTEM::RESERVED::ENG USE ONLY::FIELD WK VARS::TR SCALE 2	100.00%	100		20	300	NOCFG	RI
590	ge	::SYSTEM::RESERVED::ENG USE ONLY::FIELD WK VARS::TR SCALE 3	100.00%	100		20	300	NOCFG	RI
591	gf	::SYSTEM::RESERVED::ENG USE ONLY::FIELD WK VARS::TR SCALE 4	100.00%	100		20	300	NOCFG	RI
592	gg	::SYSTEM::RESERVED::ENG USE ONLY::FIELD WK VARS::TR SCALE 5	100.00%	100		20	300	NOCFG	RI
593	gh	::SYSTEM::RESERVED::ENG USE ONLY::FIELD WK VARS::TR SCALE 6	100.00%	100		20	300	NOCFG	RI
594	gi	::SYSTEM::RESERVED::ENG USE ONLY::FIELD WK VARS::TR SCALE 7	100.00%	100		20	300	NOCFG	RI
595	gj	::SYSTEM::RESERVED::ENG USE ONLY::FIELD WK VARS::TR SCALE 8	100.00%	100		20	300	NOCFG	RI
596	gk	::SETUP PARAMETERS::TORQUE LOOP::TORQ.DMD.ISOLATE	FALSE	>0000	FALSE; TRUE;	0	1	RECFG	RW
597	gl	::SETUP PARAMETERS::S-RAMP::INPUT	0.00%	0		-100	100	RECFG	RW
598	gm	::SETUP PARAMETERS::S-RAMP::OUTPUT	0.00%	0		-100	100	NOCFG	RO
599	gn	::SETUP PARAMETERS::TORQUE LOOP::AUX TORQUE DMD	0.00%	0		-200	200	RECFG	RW
600	go	::SETUP PARAMETERS::REF ENCODER::PHASE::RESET	FALSE	>0000	FALSE; TRUE;	0	1	RECFG	RW
601	gp	::SETUP PARAMETERS::PID::ERROR CALC::SIGN 1	POS	>0001	NEG; POS;	0	1	RECFG	RW
602	gq	::SETUP PARAMETERS::PID::ERROR CALC::SIGN 2	POS	>0001	NEG; POS;	0	1	RECFG	RW
603	gr	::SETUP PARAMETERS::REF ENCODER::INCH MENU							
604	gs	::SETUP PARAMETERS::REF ENCODER::INCH MENU::INCH ADVANCE	FALSE	>0000	FALSE; TRUE;	0	1	RECFG	RW
605	gt	::SETUP PARAMETERS::REF ENCODER::INCH MENU::INCH RETARD	FALSE	>0000	FALSE; TRUE;	0	1	RECFG	RW
606	gu	::SETUP PARAMETERS::REF ENCODER::INCH MENU::INCH RATE	10	10		0	1000	RECFG	RW
607	gv	::SETUP PARAMETERS::REF ENCODER::REF.SPEED							
608	gw	::SETUP PARAMETERS::REF ENCODER::PHASE							
609	gx	::SETUP PARAMETERS::REF ENCODER::PHASE::OFFSET MENU::OFFSET SCALE	1	1		-15000	15000	RECFG	RW
610	gy	::SETUP PARAMETERS::REF ENCODER::PHASE::SATURATED	FALSE	>0000	FALSE; TRUE;	0	1	NOCFG	RO
611	gz	::SETUP PARAMETERS::REF ENCODER::PHASE::OVERFLOW	FALSE	>0000	FALSE; TRUE;	0	1	NOCFG	RO
612	h0	::SETUP PARAMETERS::S-RAMP::AT SPEED LEVEL	1.00%	1		0	100	RECFG	RW
613	h1	::SETUP PARAMETERS::TORQUE LOOP::DC LINK VOLTS	0	VOLTS 0		-30000	30000	NOCFG	RO
614	h2	::SYSTEM::RESERVED::ENG USE ONLY::TERM V CONTROL::% LOAD @BASE SPD	5.00%	5		0	10	RECFG	RW
615	h3	::SYSTEM::RESERVED::ENG USE ONLY::TERM V CONTROL::TVolts INT RANGE	50.00%	50		0	80	RECFG	RW
616	h4	::SYSTEM::RESERVED::ENG USE ONLY::TERM V CONTROL::SPD @ TV INT 50	50.00%	50		10	100	RECFG	RW
617	h5	::SYSTEM::RESERVED::ENG USE ONLY::TERM V CONTROL::iq @TV INTGN-MIN	100.00%	100		10	150	RECFG	RW
618	h6	::SYSTEM::RESERVED::ENG USE ONLY::TERM V CONTROL::iq @TV INTGN-MAX	200.00%	200		150	300	RECFG	RW
619	h7	::SYSTEM::RESERVED::ENG USE ONLY::TERM V CONTROL::LOOP RESPNSE=nTr	10	10		4	30000	RECFG	RW
620	h8	::SYSTEM::RESERVED::ENG USE ONLY::TERM V CONTROL::FAST RESPONSE	102.50%	102.5		100	115	RECFG	RW
621	h9	::SYSTEM::RESERVED::ENG USE ONLY::TERM V CONTROL							
622	ha	::SETUP PARAMETERS::STOP RATES::PROG STOP I-LIM	150.00%	150		0	200	RECFG	RW
623	hb	::SYSTEM::RESERVED::ENG USE ONLY::TERM V CONTROL::TERM V INTEGRAL	0.00%	0		-300	300	NOCFG	RO
624	hc	::SYSTEM::RESERVED::ENG USE ONLY::MISCELLANEOUS::TOTAL TRIP COUNT	0x0000	>0000		0	65535	NOCFG	RW
625	hd	::SYSTEM::RESERVED::ENG USE ONLY::DIAGNOSTICS RESD::SLIP FREQUENCY	0.00 Hz	0		-300	300	NOCFG	RO
626	he	::SYSTEM::RESERVED::ENG USE ONLY::DIAGNOSTICS RESD							

Tag	Mn	Text	Defau	EIASCI	Enum	Min	Max	CFG	RO
627	hf	::SYSTEM::RESERVED::ENG USE ONLY::DIAGNOSTICS RESD::RUN SLIP F DIAG	FALSE	>0000	FALSE; TRUE;	0	1	NOCFG	RW
628	hg	::SYSTEM::RESERVED::ENG USE ONLY::AUTOTUNE MISC::MIN LINK V RATIO	85.00%	85		50	100	RECFG	RW
629	hh	::SETUP PARAMETERS::AUTOTUNE::AUTOCAL MAX RPM	30000 RPM	30000		0	30000	RECFG	RW
630	hi	::SYSTEM::RESERVED::ENG USE ONLY::FIELD WK VARS::MAG I SCALE 9	11.10%	11.1		0	100	NOCFG	RI
631	hj	::SYSTEM::RESERVED::ENG USE ONLY::FIELD WK VARS::TR SCALE 9	100.00%	100		20	300	NOCFG	RI
632	hk	::SETUP PARAMETERS::OP-STATION::SET UP::LOCAL KEY ENABLE	TRUE	>0001	FALSE; TRUE;	0	1	NOCFG	RI
633	hl	::SETUP PARAMETERS::OP-STATION::SET UP							
634	hm	::SYSTEM::RESERVED::ENG USE ONLY::TEST FUNCTIONS::MEAS SPD LOOP FBK	FALSE	>0000	FALSE; TRUE;	0	1	RECFG	RW
635	hn	::SYSTEM::RESERVED::ENG USE ONLY::TEST FUNCTIONS::NO OF AVERAGES	30000	30000		0	30000	RECFG	RW
636	ho	::SYSTEM::RESERVED::ENG USE ONLY::TEST FUNCTIONS::IMPLSE CNT LNGTH	30000	30000		0	30000	RECFG	RW
637	hp	::SYSTEM::RESERVED::ENG USE ONLY::TEST FUNCTIONS::IMPULSE HEIGHT	30000	30000		0	30000	RECFG	RW
638	hq	::SETUP PARAMETERS::SPEED LOOP::ADVANCED::PWR LOSS CNTRL							
639	hr	::SETUP PARAMETERS::SPEED LOOP::ADVANCED::PWR LOSS CNTRL::ENABLE	FALSE	>0000	FALSE; TRUE;	0	1	RECFG	RW
640	hs	::SETUP PARAMETERS::SPEED LOOP::ADVANCED::PWR LOSS CNTRL::TRIP THRESHOLD	0 VOLTS	0		0	1000	RECFG	RW
641	ht	::SETUP PARAMETERS::SPEED LOOP::ADVANCED::PWR LOSS CNTRL::DECEL RATE	2.50%	2.5		-100	100	RECFG	RW
642	hu	No Text	0	0		0	65535	RECFG	RO
643	hv	::SETUP PARAMETERS::SPEED LOOP::ADVANCED::PWR LOSS CNTRL::TIME LIMIT	30 SECS	30		0	30	RECFG	RW
644	hw	::SETUP PARAMETERS::SPEED LOOP::ADVANCED::PWR LOSS CNTRL::ACCEL RATE	0.50%	0.5		0	300	RECFG	RW
645	hx	No Text	0	0		0	65535	RECFG	RO
646	hy	::SETUP PARAMETERS::REF ENCODER::PHASE::TEST MODE							
647	hz	::SETUP PARAMETERS::REF ENCODER::PHASE::TEST MODE::ENABLE	FALSE	>0000	FALSE; TRUE;	0	1	RECFG	RW
648	i0	::SETUP PARAMETERS::REF ENCODER::PHASE::TEST MODE::SPEED SETPOINT	5.00%	5		-100	100	RECFG	RW
649	i1	::SETUP PARAMETERS::REF ENCODER::PHASE::TEST MODE::SPEED SETPOINT	10.20%	10		-100	100	RECFG	RW
650	i2	::SETUP PARAMETERS::REF ENCODER::PHASE::TEST MODE::PERIOD	1000 mSECS	1000		250	30000	RECFG	RW
651	i3	::SETUP PARAMETERS::REF ENCODER::PHASE::OFFSET MENU							
652	i4	::SETUP PARAMETERS::REF ENCODER::PHASE::TEST MODE::ENABLE	FALSE	>0000	FALSE; TRUE;	0	1	RECFG	RW
653	i5	::SETUP PARAMETERS::REF ENCODER::PHASE::TEST MODE::OFFSET 1	500	500		-10000	10000	RECFG	RW
654	i6	::SETUP PARAMETERS::REF ENCODER::PHASE::TEST MODE::OFFSET 2	1000	1000		-10000	10000	RECFG	RW
655	i7	::SETUP PARAMETERS::REF ENCODER::PHASE::TEST MODE::PERIOD	1000 mSECS	1000		250	30000	RECFG	RW
656	i8	::SYSTEM::CONFIGURE I/O::BLOCK DIAGRAM::REF.SPEED DEST	0	0		0	800	RECFG	RI
657	i9	::SETUP PARAMETERS::SPEED LOOP::ADVANCED::PWR LOSS CNTRL::CONTROL BAND	20 VOLTS	20		0	1000	RECFG	RW
658	ia	::SETUP PARAMETERS::REF ENCODER::CALC.REF.POSTION							
659	ib	::SETUP PARAMETERS::REF ENCODER::CALC.REF.POSTION::ENABLE	FALSE	>0000	FALSE; TRUE;	0	1	RECFG	RW
660	ic	::SETUP PARAMETERS::REF ENCODER::CALC.REF.POSTION::INPUT	0.00%	0		-100	100	RECFG	RW
661	id	::SETUP PARAMETERS::REF ENCODER::CALC.REF.POSTION::OUTPUT	0	0		-30000	30000	NOCFG	RO
662	ie	::SETUP PARAMETERS::SPEED LOOP::ADVANCED::SPEED DMD FILTER	0.75	>02EE		0	1	NOCFG	RW
663	if	::SETUP PARAMETERS::S-RAMP::JERK 2	10	10		0	150	RECFG	RW
664	ig	::SETUP PARAMETERS::S-RAMP::JERK 3	10	10		0	150	RECFG	RW
665	ih	::SETUP PARAMETERS::S-RAMP::JERK 4	10	10		0	150	RECFG	RW
666	ii	::SETUP PARAMETERS::S-RAMP::DECELERATION	10	10		0	150	RECFG	RW
667	ij	::SETUP PARAMETERS::S-RAMP::SYMMETRIC	TRUE	>0001	FALSE; TRUE;	0	1	RECFG	RW
668	ik	::SETUP PARAMETERS::S-RAMP::ERROR THRESHOLD	0.50%	0.5		0	100	RECFG	RW
669	il	::SETUP PARAMETERS::S-RAMP::AUTO RESET	TRUE	>0001	FALSE; TRUE;	0	1	RECFG	RW
670	im	::SETUP PARAMETERS::REF ENCODER::PHASE::OFFSET MENU::OFFSET TRIM	0	0		-32768	32767	RECFG	RW
671	in	::SYSTEM::CONFIGURE I/O::ANALOG INPUTS::ANIN FILTER	0.8	>0320		0	1	NOCFG	RW
672	io	::SERIAL LINKS::EI ASCII::OPTION VERSION	0	0		0	300	RECFG	RW
673	ip	::SETUP PARAMETERS::SPEED LOOP::ADVANCED::SPEED FBK FILTER	0.5	>01F4		0	1	NOCFG	RW
674	iq	::SETUP PARAMETERS::SPEED LOOP::ADVANCED::ADAPTIVE THRESH	0.00%	0		0	10	RECFG	RW
675	ir	::SETUP PARAMETERS::SPEED LOOP::ADVANCED::ADAPTIVE P-GAIN	10	10		0	250	RECFG	RW
676	is	::SYSTEM::CONFIGURE I/O::ANALOG OUTPUTS::ANOUT 1 (C5): HARDWARE OFFSET	0.00%	0		-300	300	RECFG	RW
677	it	::SYSTEM::CONFIGURE I/O::ANALOG OUTPUTS::ANOUT 2 (F5): HARDWARE OFFSET	0.00%	0		-300	300	RECFG	RW
678	iu	::SETUP PARAMETERS::RAISE/LOWER::RAISE/LOWER INIT	0.00%	0		-300	300	RECFG	RW
679	iv	::SYSTEM::PERSISTENT DATA::TAG No 1	0	0		0	800	RECFG	RI
680	iw	::SYSTEM::PERSISTENT DATA::TAG No 2	0	0		0	800	RECFG	RI
681	ix	::SYSTEM::PERSISTENT DATA::COUNT	0	0		0	30000	NOCFG	RO
682	iy	::SYSTEM::PERSISTENT DATA::/WRITE	FALSE	>0000	FALSE; TRUE;	0	1	RECFG	RW
683	iz	::SYSTEM::PERSISTENT DATA							
684	j0	::SETUP PARAMETERS::TORQUE LOOP::DC VOLTS UNFLT	0 VOLTS	0		-30000	30000	NOCFG	RO
685	j1	::SETUP PARAMETERS::ALARMS / SEQ::UNDER V LEVEL	440 VOLTS	440		0	30000	RECFG	RW
686	j2	::SETUP PARAMETERS::ALARMS / SEQ::/UNDER VOLTS	FALSE	>0000	FALSE; TRUE;	0	1	NOCFG	RO
687	j3	::SETUP PARAMETERS::ALARMS / SEQ::SPD.FBK.DELAY	10.000 SECS	10		0	30	RECFG	RW
688	j4	::SETUP PARAMETERS::ALARMS / SEQ::SPD.FBK.THRESHD	10.00%	10		0	300	RECFG	RW
689	j5	::SETUP PARAMETERS::ALARMS / SEQ::SPD.FBK.INHIBIT	FALSE	>0000	FALSE; TRUE;	0	1	RECFG	RW
690	j6	::SETUP PARAMETERS::OPERATORS							
691	j7	::SETUP PARAMETERS::OPERATORS::VALUE OPERATOR 1							
692	j8	::SETUP PARAMETERS::OPERATORS::VALUE OPERATOR 1::INPUT A	0.00%	0		-300	300	RECFG	RW

Tag	Mn	Text		Defau	EIASCI	Enum	Min	Max	CFG	RO
693	j9	::SETUP PARAMETERS::OPERATORS::VALUE OPERATOR 1::INPUT	B	0.00%	0		-300	300	RECFG	RW
694	ja	::SETUP PARAMETERS::OPERATORS::VALUE OPERATOR 1::INPUT	C	0.00%	0		-300	300	RECFG	RW
695	jb	::SETUP PARAMETERS::OPERATORS::VALUE OPERATOR 1::TYPE		IF(C)	-A 0	IF(C) -A; ABS(A+B+C); SWITCH(A,B); (A*B)/C; A+B+C; A-B-C; B <= A <=C; A>B+/-C; A>=B; ABS(A)>B+/-C; ABS(A)>=B; A(1+B); IF(C) HOLD(A); BINARY DECODE; ON DELAY; OFF DELAY; TIMER; MINIMUM PULSE; PULSE TRAIN; WINDOW; UP/DWN COUNTER;	0	20	RECFG	RW
696	jc	::SETUP PARAMETERS::OPERATORS::VALUE OPERATOR 1::OUTPUT		0.00%	0		-300	300	NOCFG	RO
697	jd	::SYSTEM::CONFIGURE I/O::BLOCK DIAGRAM::VALUE OP 1 DEST		0	0		0	800	RECFG	RI
698	je	::SETUP PARAMETERS::OPERATORS::VALUE OPERATOR 2								
699	jf	::SETUP PARAMETERS::OPERATORS::VALUE OPERATOR 2::INPUT	A	0.00%	0		-300	300	RECFG	RW
700	jg	::SETUP PARAMETERS::OPERATORS::VALUE OPERATOR 2::INPUT	B	0.00%	0		-300	300	RECFG	RW
701	jh	::SETUP PARAMETERS::OPERATORS::VALUE OPERATOR 2::INPUT	C	0.00%	0		-300	300	RECFG	RW
702	ji	::SETUP PARAMETERS::OPERATORS::VALUE OPERATOR 2::TYPE		IF(C)	-A 0	IF(C) -A; ABS(A+B+C); SWITCH(A,B); (A*B)/C; A+B+C; A-B-C; B <= A <=C; A>B+/-C; A>=B; ABS(A)>B+/-C; ABS(A)>=B; A(1+B); IF(C) HOLD(A); BINARY DECODE; ON DELAY; OFF DELAY; TIMER; MINIMUM PULSE; PULSE TRAIN; WINDOW; UP/DWN COUNTER;	0	20	RECFG	RW
703	jj	::SETUP PARAMETERS::OPERATORS::VALUE OPERATOR 2::OUTPUT		0.00%	0		-300	300	NOCFG	RO
704	jk	::SYSTEM::CONFIGURE I/O::BLOCK DIAGRAM::VALUE OP 2 DEST		0	0		0	800	RECFG	RI
705	jl	::SETUP PARAMETERS::OPERATORS::VALUE OPERATOR 3								
706	jm	::SETUP PARAMETERS::OPERATORS::VALUE OPERATOR 3::INPUT	A	0.00%	0		-300	300	RECFG	RW
707	jn	::SETUP PARAMETERS::OPERATORS::VALUE OPERATOR 3::INPUT	B	0.00%	0		-300	300	RECFG	RW
708	jo	::SETUP PARAMETERS::OPERATORS::VALUE OPERATOR 3::INPUT	C	0.00%	0		-300	300	RECFG	RW
709	jp	::SETUP PARAMETERS::OPERATORS::VALUE OPERATOR 3::TYPE		IF(C)	-A 0	IF(C) -A; ABS(A+B+C); SWITCH(A,B); (A*B)/C; A+B+C; A-B-C; B <= A <=C; A>B+/-C; A>=B; ABS(A)>B+/-C; ABS(A)>=B; A(1+B); IF(C) HOLD(A); BINARY DECODE; ON DELAY; OFF DELAY; TIMER; MINIMUM PULSE; PULSE TRAIN; WINDOW; UP/DWN COUNTER;	0	20	RECFG	RW
710	jq	::SETUP PARAMETERS::OPERATORS::VALUE OPERATOR 3::OUTPUT		0.00%	0		-300	300	NOCFG	RO
711	jr	::SYSTEM::CONFIGURE I/O::BLOCK DIAGRAM::VALUE OP 3 DEST		0	0		0	800	RECFG	RI
712	js	::SETUP PARAMETERS::OPERATORS::VALUE OPERATOR 4								
713	jt	::SETUP PARAMETERS::OPERATORS::VALUE OPERATOR 4::INPUT	A	0.00%	0		-300	300	RECFG	RW
714	ju	::SETUP PARAMETERS::OPERATORS::VALUE OPERATOR 4::INPUT	B	0.00%	0		-300	300	RECFG	RW
715	jv	::SETUP PARAMETERS::OPERATORS::VALUE OPERATOR 4::INPUT	C	0.00%	0		-300	300	RECFG	RW
716	jw	::SETUP PARAMETERS::OPERATORS::VALUE OPERATOR 4::TYPE		IF(C)	-A 0	IF(C) -A; ABS(A+B+C); SWITCH(A,B); (A*B)/C; A+B+C; A-B-C; B <= A <=C; A>B+/-C; A>=B; ABS(A)>B+/-C; ABS(A)>=B; A(1+B); IF(C) HOLD(A); BINARY DECODE; ON DELAY; OFF DELAY; TIMER; MINIMUM PULSE; PULSE TRAIN; WINDOW; UP/DWN COUNTER;	0	20	RECFG	RW
717	jx	::SETUP PARAMETERS::OPERATORS::VALUE OPERATOR 4::OUTPUT		0.00%	0		-300	300	NOCFG	RO
718	jy	::SYSTEM::CONFIGURE I/O::BLOCK DIAGRAM::VALUE OP 4 DEST		0	0		0	800	RECFG	RI
719	jz	::SETUP PARAMETERS::OPERATORS::LOGIC OPERATOR 1								
720	k0	::SETUP PARAMETERS::OPERATORS::LOGIC OPERATOR 1::INPUT	A	FALSE	>0000	FALSE; TRUE;	0	1	RECFG	RW
721	k1	::SETUP PARAMETERS::OPERATORS::LOGIC OPERATOR 1::INPUT	B	FALSE	>0000	FALSE; TRUE;	0	1	RECFG	RW
722	k2	::SETUP PARAMETERS::OPERATORS::LOGIC OPERATOR 1::INPUT	C	FALSE	>0000	FALSE; TRUE;	0	1	RECFG	RW
723	k3	::SETUP PARAMETERS::OPERATORS::LOGIC OPERATOR 1::TYPE		NOT(A)	0	NOT(A); AND(A,B,C); NAND(A,B,C); OR(A,B,C); NOR(A,B,C); XOR(A,B); 0-1 EDGE(A); 1-0 EDGE(A); AND(A,B,!C); OR(A,B,!C); FLIP-FLOP;	0	10	RECFG	RW
724	k4	::SETUP PARAMETERS::OPERATORS::LOGIC OPERATOR 1::OUTPUT		FALSE	>0000	FALSE; TRUE;	0	1	NOCFG	RO
725	k5	::SYSTEM::CONFIGURE I/O::BLOCK DIAGRAM::LOGIC OP 1 DEST		0	0		0	800	RECFG	RI
726	k6	::SETUP PARAMETERS::OPERATORS::LOGIC OPERATOR 2								
727	k7	::SETUP PARAMETERS::OPERATORS::LOGIC OPERATOR 2::INPUT	A	FALSE	>0000	FALSE; TRUE;	0	1	RECFG	RW
728	k8	::SETUP PARAMETERS::OPERATORS::LOGIC OPERATOR 2::INPUT	B	FALSE	>0000	FALSE; TRUE;	0	1	RECFG	RW
729	k9	::SETUP PARAMETERS::OPERATORS::LOGIC OPERATOR 2::INPUT	C	FALSE	>0000	FALSE; TRUE;	0	1	RECFG	RW

Tag	Mn	Text	Defau	EIASCI	Enum	Min	Max	CFG	RO
730	ka	::SETUP PARAMETERS::OPERATORS::LOGIC OPERATOR 2::TYPE	NOT(A)	0	NOT(A); AND(A,B,C); NAND(A,B,C); OR(A,B,C); NOR(A,B,C); XOR(A,B); EDGE(A); 1-0 EDGE(A); AND(A,B,!C); OR(A,B,!C); FLIP-FLOP;	0	10	RECFG	RW
731	kb	::SETUP PARAMETERS::OPERATORS::LOGIC OPERATOR 2::OUTPUT	FALSE	>0000	FALSE; TRUE;	0	1	NOCFG	RO
732	kc	::SYSTEM::CONFIGURE I/O::BLOCK DIAGRAM::LOGIC OP 2 DEST	0	0		0	800	RECFG	RI
733	kd	::SETUP PARAMETERS::OPERATORS::LOGIC OPERATOR 3							
734	ke	::SETUP PARAMETERS::OPERATORS::LOGIC OPERATOR 3::INPUT A	FALSE	>0000	FALSE; TRUE;	0	1	RECFG	RW
735	kf	::SETUP PARAMETERS::OPERATORS::LOGIC OPERATOR 3::INPUT B	FALSE	>0000	FALSE; TRUE;	0	1	RECFG	RW
736	kg	::SETUP PARAMETERS::OPERATORS::LOGIC OPERATOR 3::INPUT C	FALSE	>0000	FALSE; TRUE;	0	1	RECFG	RW
737	kh	::SETUP PARAMETERS::OPERATORS::LOGIC OPERATOR 3::TYPE	NOT(A)	0	NOT(A); AND(A,B,C); NAND(A,B,C); OR(A,B,C); NOR(A,B,C); XOR(A,B); EDGE(A); 1-0 EDGE(A); AND(A,B,!C); OR(A,B,!C); FLIP-FLOP;	0	10	RECFG	RW
738	ki	::SETUP PARAMETERS::OPERATORS::LOGIC OPERATOR 3::OUTPUT	FALSE	>0000	FALSE; TRUE;	0	1	NOCFG	RO
739	kj	::SYSTEM::CONFIGURE I/O::BLOCK DIAGRAM::LOGIC OP 3 DEST	0	0		0	800	RECFG	RI
740	kk	::SETUP PARAMETERS::OPERATORS::LOGIC OPERATOR 4							
741	kl	::SETUP PARAMETERS::OPERATORS::LOGIC OPERATOR 4::INPUT A	FALSE	>0000	FALSE; TRUE;	0	1	RECFG	RW
742	km	::SETUP PARAMETERS::OPERATORS::LOGIC OPERATOR 4::INPUT B	FALSE	>0000	FALSE; TRUE;	0	1	RECFG	RW
743	kn	::SETUP PARAMETERS::OPERATORS::LOGIC OPERATOR 4::INPUT C	FALSE	>0000	FALSE; TRUE;	0	1	RECFG	RW
744	ko	::SETUP PARAMETERS::OPERATORS::LOGIC OPERATOR 4::TYPE	NOT(A)	0	NOT(A); AND(A,B,C); NAND(A,B,C); OR(A,B,C); NOR(A,B,C); XOR(A,B); EDGE(A); 1-0 EDGE(A); AND(A,B,!C); OR(A,B,!C); FLIP-FLOP;	0	10	RECFG	RW
745	kp	::SETUP PARAMETERS::OPERATORS::LOGIC OPERATOR 4::OUTPUT	FALSE	>0000	FALSE; TRUE;	0	1	NOCFG	RO
746	kq	::SYSTEM::CONFIGURE I/O::BLOCK DIAGRAM::LOGIC OP 4 DEST	0	0		0	800	RECFG	RI
747	kr	No Text	0	0		0	65535	RECFG	RO
748	ks	No Text	0	0		0	65535	RECFG	RO
749	kt	No Text	0	0		0	65535	RECFG	RO
750	ku	No Text	0	0		0	65535	RECFG	RO
751	kv	No Text	0	0		0	65535	RECFG	RO
752	kw	No Text	0	0		0	65535	RECFG	RO
753	kx	No Text	0	0		0	65535	RECFG	RO
754	ky	No Text	0	0		0	65535	RECFG	RO
755	kz	No Text	0	0		0	65535	RECFG	RO
756	l0	No Text	0	0		0	65535	RECFG	RO
757	l1	No Text	0	0		0	65535	RECFG	RO
758	l2	No Text	0	0		0	65535	RECFG	RO
759	l3	No Text	0	0		0	65535	RECFG	RO
760	l4	No Text	0	0		0	65535	RECFG	RO
761	l5	::SETUP PARAMETERS::REF ENCODER::LENGTH MENU							
762	l6	::SETUP PARAMETERS::REF ENCODER::LENGTH MENU::LENGTH SCALE	1	1		-15000	15000	RECFG	RW
763	l7	::SETUP PARAMETERS::REF ENCODER::LENGTH MENU::SUBTRACT LENGTH	FALSE	>0000	FALSE; TRUE;	0	1	RECFG	RW
764	l8	::SETUP PARAMETERS::REF ENCODER::LENGTH MENU::LENGTH RATE	100	100		0	3000	RECFG	RW
765	l9	::SETUP PARAMETERS::REF ENCODER::LENGTH MENU::LENGTH	0	0		-30000	30000	RECFG	RW
766	la	::SETUP PARAMETERS::SPEED LOOP::ADVANCED::PWR LOSS CNTRL::PWR LOSS ACTIVE	FALSE	>0000	FALSE; TRUE;	0	1	RECFG	RO
767	lb	::SETUP PARAMETERS::REF ENCODER::REF.SPEED::FILTER TC	1.00 SECS	1		0	300	RECFG	RW
768	lc	::SETUP PARAMETERS::REF ENCODER::REF.SPEED::FILTERED REF.SPD	0.00%	0		-300	300	RECFG	RO
769	ld	::SETUP PARAMETERS::SPEED LOOP::ADVANCED::ROTOR TEMP	100.00%	100		0	100	RECFG	RW
770	le	::SETUP PARAMETERS::SPEED LOOP::ADVANCED::Tr COMP (COLD)	80.00%	80		50	100	RECFG	RW
771	lf	::SERIAL LINKS::PORT P3							
772	lg	::SYSTEM::RESERVED::ENG USE ONLY::TRACE::TRACE INDEX	0x0000	>0000		0	65535	NOCFG	RO
773	lh	::SETUP PARAMETERS::HOME::OVERSHOOT LIMIT	1.00%	1		0	100	RECFG	RW
774	li	::SETUP PARAMETERS::CALIBRATION::ENCODER SUPPLY	50%	50		50	100	RECFG	RW
775	lj	No Text	0	0		0	65535	RECFG	RO
776	lk	::SERIAL LINKS::PORT P1::ERROR REPORT	0x0000	>0000		0	65535	RECFG	RW
777	ll	::SETUP PARAMETERS::STOP RATES::PILOT 590 MODE	FALSE	>0000	FALSE; TRUE;	0	1	RECFG	RW
778	lm	::SETUP PARAMETERS::SPEED LOOP::ZERO SPEED							
779	ln	::SETUP PARAMETERS::SPEED LOOP::ADVANCED							
780	lo	::SETUP PARAMETERS::TORQUE LOOP::TORQUE LIMITS							
781	lp	::SYSTEM::SOFTWARE INFO::CO-PRO TYPE	0	>0000		0	1	NOCFG	RO
782	lq	::SYSTEM::SOFTWARE INFO::620 VERSION	Odd Ball	-3712		0	0	NOCFG	RO
783	lr	::SETUP PARAMETERS::REF ENCODER::REF.SPEED::SCALE REF.SPEED	TRUE	>0001	FALSE; TRUE;	0	1	RECFG	RW
784	ls	::SETUP PARAMETERS::SPEED LOOP::ADVANCED::Tr COMP	0.00%	0		0	100	NOCFG	RO
785	lt	::SYSTEM::SOFTWARE INFO::60Hz DEFAULTS	FALSE	0	FALSE; TRUE;	0	1	NOCFG	RO
786	lu	::SETUP PARAMETERS::AUX I/O::REMOTE SEQ	0x0000	>0000		0	65535	NOCFG	RW
787	lv	::SETUP PARAMETERS::AUX I/O::SEQ STATUS	0x0000	>0000		0	65535	NOCFG	RO

Tag	Mn	Text	Defau	EIASCI	Enum	Min	Max	CFG	RO
788	lw	::SETUP PARAMETERS::ALARMS / SEQ::REMOTE INHIBIT	FALSE	>0000	FALSE; TRUE;	0	1	RECFG	RW
789	lx	::SETUP PARAMETERS::ALARMS / SEQ::REMOTE TRIP	OK	0	OK; WARNING; ACTIVE;	0	2	NOCFG	RO
790	ly	::SETUP PARAMETERS::ALARMS / SEQ::REMOTE DELAY	1	1		0	300	RECFG	RW
791	lz	::SETUP PARAMETERS::AUX I/O::REM.SEQ.ENABLE	FALSE	>0000	FALSE; TRUE;	0	1	RECFG	RI
792	m0	No Text	0	0		0	65535	RECFG	RO
793	m1	No Text	0	0		0	65535	RECFG	RO
794	m2	No Text	0	0		0	65535	RECFG	RO
795	m3	No Text	0	0		0	65535	RECFG	RO
796	m4	No Text	0	0		0	65535	RECFG	RO
797	m5	No Text	0	0		0	65535	RECFG	RO
798	m6	No Text	0	0		0	65535	RECFG	RO
799	m7	No Text	0	0		0	65535	RECFG	RO

TAGS by MMI Text String

Tag	Mn	Text	Defau	EIASCI	Enum	Min	Max	CFG	RO
4	4	MENU LEVEL							
202	5m	::ALARM STATUS							
218	62	::ALARM STATUS::FIRST ALARM	0x0000	>0000		0	65535	NOCFG	RO
219	63	::ALARM STATUS::HEALTH INHIBIT	0x0000	>0000		0	65535	NOCFG	RW
203	5n	::ALARM STATUS::HEALTH STORE	0x0000	>0000		0	65535	NOCFG	RO
217	61	::ALARM STATUS::HEALTH WORD	0x0000	>0000		0	65535	NOCFG	RO
90	2i	::CONFIGURE DRIVE							
482	de	::CONFIGURE DRIVE::AUTOTUNE FLAG	FALSE	>0000	FALSE; TRUE;	0	1	RECFG	RW
448	cg	::CONFIGURE DRIVE::BASE FREQUENCY	50.0 Hz	50		0.1	400	NOCFG	RI
131	3n	::CONFIGURE DRIVE::ENCODER LINES	2048	2048		0	8000	NOCFG	RI
164	4k	::CONFIGURE DRIVE::ENCODER SIGN	POS	>0001	NEG; POS;	0	1	NOCFG	RI
453	cl	::CONFIGURE DRIVE::MAG CURRENT %	30.00%	30		0	90	NOCFG	RI
159	4f	::CONFIGURE DRIVE::MAIN TORQUE LIM.	100.00%	100		0	200	RECFG	RW
130	3m	::CONFIGURE DRIVE::MAX SPEED RPM	1500 RPM	1500		0	32000	RECFG	RW
134	3q	::CONFIGURE DRIVE::MOTOR RATING RMS	1.0 AMPS	1		0.1	3000	RECFG	RI
486	di	::CONFIGURE DRIVE::MOTOR VOLTS	415 VOLTS	415		0	1000	RECFG	RW
135	3r	::CONFIGURE DRIVE::NAMEPLATE RPM	1440 RPM	1440		0	32000	RECFG	RI
399	b3	::CONFIGURE DRIVE::NO.OF POLES	4	4		2	50	NOCFG	RI
458	cq	::CONFIGURE DRIVE::ROTOR TIME CONST	100.0 mSECS	100		12.8	3000	RECFG	RI
162	4i	::CONFIGURE DRIVE::SPD. INT. TIME	100 mSECS	100		1	30000	RECFG	RW
161	4h	::CONFIGURE DRIVE::SPD. PROP. GAIN	10	10		0	250	RECFG	RW
5	5	::DIAGNOSTICS							
204	5o	::MENUS							
207	5r	::MENUS::DATA DELAY	100	100		20	10000	NOCFG	RW
314	8q	::MENUS::DATA DELAY::MAX MMI CYCLE TM	4000	4000		0	30000	RECFG	RW
313	8p	::MENUS::DATA DELAY::MIN MMI CYCLE TM	200	200		0	30000	RECFG	RW
205	5p	::MENUS::FULL MENUS	TRUE	>0001	FALSE; TRUE;	0	1	NOCFG	RW
206	5q	::MENUS::MENU DELAY	0	0		0	10000	NOCFG	RW
208	5s	::PARAMETER SAVE	UP TO ACTION	>0000	UP TO ACTION; WORKING;	0	0.01	RECFG	RW
209	5t	::PARAMETER SAVE::SAVE (U/D)							
199	5j	::PASSWORD							
69	1x	::PASSWORD::BYPASS PASSWORD	FALSE	>0000	FALSE; TRUE;	0	1	RECFG	RW
201	5l	::PASSWORD::CHANGE PASSWORD	0x0000	0		0	65535	RECFG	RW
200	5k	::PASSWORD::ENTER PASSWORD	0x0000	>0000		0	65535	RECFG	RW
210	5u	::SERIAL LINKS							
232	6g	::SERIAL LINKS::5703 SUPPORT							
234	6i	::SERIAL LINKS::5703 SUPPORT::INVERT SETPOINT	FALSE	>0000	FALSE; TRUE;	0	1	RECFG	RW
236	6k	::SERIAL LINKS::5703 SUPPORT::OUTPUT	0.00%	0		-300	300	RECFG	RW
584	g8	::SERIAL LINKS::5703 SUPPORT::RAW INPUT	0.00%	0		-300	300	RECFG	RW
235	6j	::SERIAL LINKS::5703 SUPPORT::SCALED INPUT	0.00%	0		-300	300	RECFG	RW
233	6h	::SERIAL LINKS::5703 SUPPORT::SETPT. RATIO	1	1		-3	3	RECFG	RW
222	66	::SERIAL LINKS::EI ASCII							
223	67	::SERIAL LINKS::EI ASCII::GROUP ID (GID)	0	0		0	7	RECFG	RW
230	6e	::SERIAL LINKS::EI ASCII::OPTION ADDRESS	0	0		0	30000	RECFG	RW
672	io	::SERIAL LINKS::EI ASCII::OPTION VERSION	0	0		0	300	RECFG	RW
224	68	::SERIAL LINKS::EI ASCII::UNIT ID (UID)	0	0		0	15	RECFG	RW
225	69	::SERIAL LINKS::PORT P1							
776	lk	::SERIAL LINKS::PORT P1::ERROR REPORT	0x0000	>0000		0	65535	RECFG	RW
228	6c	::SERIAL LINKS::PORT P1::P1 BAUD RATE	9600	5	300; 600; 1200; 2400; 4800; 9600; 19200; 38400; 57600;	300	8	NOCFG	RW
227	6b	::SERIAL LINKS::PORT P1::P1 MODE	EI ASCII	10	DISABLED; EI ASCII; FIELD BUS;	10	11	NOCFG	RW
771	lf	::SERIAL LINKS::PORT P3							
238	6m	::SERIAL LINKS::PORT P3::DUMP MMI (TX)	UP TO ACTION	>0000	UP TO ACTION; WORKING;	0	1	RECFG	RW
229	6d	::SERIAL LINKS::PORT P3::ERROR REPORT	0x0000	>0000		0	65535	RECFG	RW
221	65	::SERIAL LINKS::PORT P3::MEMORY DUMP	FALSE	>0000	FALSE; TRUE;	0	1	RECFG	RW
241	6p	::SERIAL LINKS::PORT P3::P3 BAUD RATE	9600	5	300; 600; 1200; 2400; 4800; 9600; 19200;	300	6	NOCFG	RW
237	6l	::SERIAL LINKS::PORT P3::P3 MODE	EI ASCII	6	DISABLED; 5703 MASTER; 5703 SLAVE; FIELD BUS ; TAG LIST NEWPORT; CO-PROCESSOR; EI ASCII;	0	6	NOCFG	RW
211	5v	::SERIAL LINKS::PORT P3::P3 TAG LIST							
318	8u	::SERIAL LINKS::PORT P3::P3 TAG LIST::P3 TAG LIST TC	0.10 SECS	0.1		0	300	RECFG	RW
212	5w	::SERIAL LINKS::PORT P3::P3 TAG LIST::TAG 1	7	7		0	800	RECFG	RW
239	6n	::SERIAL LINKS::PORT P3::UDP XFER (RX)	UP TO ACTION	>0000	UP TO ACTION; WORKING;	0	0.01	RECFG	RW
240	6o	::SERIAL LINKS::PORT P3::UDP XFER (TX)	UP TO ACTION	>0000	UP TO ACTION; WORKING;	0	0.01	RECFG	RW
52	1g	::SETUP PARAMETERS							
140	3w	::SETUP PARAMETERS::ALARMS / SEQ							
686	j2	::SETUP PARAMETERS::ALARMS / SEQ::/UNDER VOLTS	FALSE	>0000	FALSE; TRUE;	0	1	NOCFG	RO

Tag	Mn	Text		Defau	EIASCI	Enum	Min	Max	CFG	RO
142	3y	::SETUP PARAMETERS::ALARMS / SEQ::5703 RCV.INHIBIT		FALSE	>0000	FALSE; TRUE;	0	1	RECFG	RW
166	4m	::SETUP PARAMETERS::ALARMS / SEQ::ACK ALARM		TRUE	>0001	FALSE; TRUE;	0	1	RECFG	RW
24	0o	::SETUP PARAMETERS::ALARMS / SEQ::DRIVE ENABLE		FALSE	>0000	FALSE; TRUE;	0	1	NOCFG	RO
23	0n	::SETUP PARAMETERS::ALARMS / SEQ::DRIVE START		FALSE	>0000	FALSE; TRUE;	0	1	NOCFG	RO
144	40	::SETUP PARAMETERS::ALARMS / SEQ::EXTERNAL TRIP		FALSE	>0000	FALSE; TRUE;	0	1	RECFG	RW
12	0c	::SETUP PARAMETERS::ALARMS / SEQ::HEALTH OUTPUT		FALSE	>0000	FALSE; TRUE;	0	1	NOCFG	RO
27	0r	::SETUP PARAMETERS::ALARMS / SEQ::HEALTHY		FALSE	>0000	FALSE; TRUE;	0	1	NOCFG	RO
129	3l	::SETUP PARAMETERS::ALARMS / SEQ::HEATSINK LEVEL		17.00%	17		0	200	RECFG	RW
309	8l	::SETUP PARAMETERS::ALARMS / SEQ::MOTOR TMP.RST.		50.00%	50		0	200	RECFG	RW
128	3k	::SETUP PARAMETERS::ALARMS / SEQ::MOTOR TMP.TRIP		75.00%	75		0	200	RECFG	RW
146	42	::SETUP PARAMETERS::ALARMS / SEQ::MOTR.TMP.INHIBIT		FALSE	>0000	FALSE; TRUE;	0	1	RECFG	RW
25	0p	::SETUP PARAMETERS::ALARMS / SEQ::OPERATING MODE		INITIAL	0	INITIAL; STOPPED; F-STOP; AUTOTUNE; RUN; JOG; RMP STOP; RUN STOP; JOG STOP; P-START1; P-START2;	0	10	NOCFG	RO
145	41	::SETUP PARAMETERS::ALARMS / SEQ::OVER SPD INHIBIT		FALSE	>0000	FALSE; TRUE;	0	1	RECFG	RW
139	3v	::SETUP PARAMETERS::ALARMS / SEQ::OVER SPEED LEVEL		120.00%	120		0	300	NOCFG	RI
559	fj	::SETUP PARAMETERS::ALARMS / SEQ::READY		FALSE	>0000	FALSE; TRUE;	0	1	NOCFG	RO
790	ly	::SETUP PARAMETERS::ALARMS / SEQ::REMOTE DELAY		1	1		0	300	RECFG	RW
788	lw	::SETUP PARAMETERS::ALARMS / SEQ::REMOTE INHIBIT		FALSE	>0000	FALSE; TRUE;	0	1	RECFG	RW
789	lx	::SETUP PARAMETERS::ALARMS / SEQ::REMOTE TRIP		OK	0	OK; WARNING; ACTIVE;	0	2	NOCFG	RO
28	0s	::SETUP PARAMETERS::ALARMS / SEQ::RUN		FALSE	>0000	FALSE; TRUE;	0	1	NOCFG	RO
687	j3	::SETUP PARAMETERS::ALARMS / SEQ::SPD.FBK.DELAY		10.000 SECS	10		0	30	RECFG	RW
689	j5	::SETUP PARAMETERS::ALARMS / SEQ::SPD.FBK.INHIBIT		FALSE	>0000	FALSE; TRUE;	0	1	RECFG	RW
688	j4	::SETUP PARAMETERS::ALARMS / SEQ::SPD.FBK.THRESHD		10.00%	10		0	300	RECFG	RW
137	3t	::SETUP PARAMETERS::ALARMS / SEQ::STALL DELAY		10	10		0	300	RECFG	RW
143	3z	::SETUP PARAMETERS::ALARMS / SEQ::STALL INHIBIT		FALSE	>0000	FALSE; TRUE;	0	1	RECFG	RW
138	3u	::SETUP PARAMETERS::ALARMS / SEQ::STALL SPEED		4.00%	4		0	300	RECFG	RW
136	3s	::SETUP PARAMETERS::ALARMS / SEQ::STALL TORQUE		95.00%	95		0	200	RECFG	RW
20	0k	::SETUP PARAMETERS::ALARMS / SEQ::STALL TRIP		OK	0	OK; WARNING; ACTIVE;	0	2	NOCFG	RO
685	j1	::SETUP PARAMETERS::ALARMS / SEQ::UNDER V LEVEL		440 VOLTS	440		0	30000	RECFG	RW
481	dd	::SETUP PARAMETERS::AUTOTUNE								
629	hh	::SETUP PARAMETERS::AUTOTUNE::AUTOCAL MAX RPM		30000 RPM	30000		0	30000	RECFG	RW
483	df	::SETUP PARAMETERS::AUTOTUNE::MAG I AUTOTUNE		TRUE	>0001	FALSE; TRUE;	0	1	RECFG	RW
484	dg	::SETUP PARAMETERS::AUTOTUNE::SET Tr < RTD SPD		TRUE	>0001	FALSE; TRUE;	0	1	RECFG	RW
65	1t	::SETUP PARAMETERS::AUX I/O								
68	1w	::SETUP PARAMETERS::AUX I/O::AUX ENABLE		TRUE	>0001	FALSE; TRUE;	0	1	RECFG	RW
67	1v	::SETUP PARAMETERS::AUX I/O::AUX JOG		TRUE	>0001	FALSE; TRUE;	0	1	RECFG	RW
66	1u	::SETUP PARAMETERS::AUX I/O::AUX START		TRUE	>0001	FALSE; TRUE;	0	1	RECFG	RW
72	20	::SETUP PARAMETERS::AUX I/O::ENABLE		FALSE	>0000	FALSE; TRUE;	0	1	RECFG	RW
71	1z	::SETUP PARAMETERS::AUX I/O::JOG INPUT		FALSE	>0000	FALSE; TRUE;	0	1	RECFG	RW
791	lz	::SETUP PARAMETERS::AUX I/O::REM.SEQ.ENABLE		FALSE	>0000	FALSE; TRUE;	0	1	RECFG	RI
786	lu	::SETUP PARAMETERS::AUX I/O::REMOTE SEQ		0x0000	>0000		0	65535	NOCFG	RW
787	lv	::SETUP PARAMETERS::AUX I/O::SEQ STATUS		0x0000	>0000		0	65535	NOCFG	RO
70	1y	::SETUP PARAMETERS::AUX I/O::START		FALSE	>0000	FALSE; TRUE;	0	1	RECFG	RW
127	3j	::SETUP PARAMETERS::CALIBRATION								
774	li	::SETUP PARAMETERS::CALIBRATION::ENCODER SUPPLY		50%	50		50	100	RECFG	RW
387	ar	::SETUP PARAMETERS::HOME								
398	b2	::SETUP PARAMETERS::HOME::1/ENCODER SCALE		4	4		0.01	100	RECFG	RW
397	b1	::SETUP PARAMETERS::HOME::HOME		FALSE	>0000	FALSE; TRUE;	0	1	RECFG	RW
394	ay	::SETUP PARAMETERS::HOME::HOME INPUT		0.00%	0		-100	100	RECFG	RW
395	az	::SETUP PARAMETERS::HOME::HOME OUTPUT		0.00%	0		-100	100	NOCFG	RO
396	b0	::SETUP PARAMETERS::HOME::HOMING DISTANCE		2048	2048		0	30000	RECFG	RW
388	as	::SETUP PARAMETERS::HOME::LINEAR O/P		FALSE	>0000	FALSE; TRUE;	0	1	RECFG	RW
773	lh	::SETUP PARAMETERS::HOME::OVERSHOOT LIMIT		1.00%	1		0	100	RECFG	RW
115	37	::SETUP PARAMETERS::INVERSE TIME								
116	38	::SETUP PARAMETERS::INVERSE TIME::AIMING POINT		105.00%	105		100	200	RECFG	RW
117	39	::SETUP PARAMETERS::INVERSE TIME::DELAY		60.0 SECS	60		0	1000	RECFG	RW
118	3a	::SETUP PARAMETERS::INVERSE TIME::DOWN RATE		10.0 SECS	10		0	600	RECFG	RW
15	0f	::SETUP PARAMETERS::INVERSE TIME::INVERSE TIME O/P		0.00%	0		-300	300	NOCFG	RO
148	44	::SETUP PARAMETERS::INVERSE TIME::UP RATE		120.0 SECS	120		0	600	RECFG	RW
74	22	::SETUP PARAMETERS::JOG								
113	35	::SETUP PARAMETERS::JOG::JOG ACCEL RATE		10.0 SECS	10		0	100	RECFG	RW
114	36	::SETUP PARAMETERS::JOG::JOG DECEL RATE		10.0 SECS	10		0	100	RECFG	RW
75	23	::SETUP PARAMETERS::JOG::JOG SPEED 1		10.00%	10		-100	100	RECFG	RW
76	24	::SETUP PARAMETERS::JOG::JOG SPEED 2		-10.00%	-10		-100	100	RECFG	RW
80	28	::SETUP PARAMETERS::JOG::MODE		FALSE	>0000	FALSE; TRUE;	0	1	RECFG	RW
690	j6	::SETUP PARAMETERS::OPERATORS								
719	jz	::SETUP PARAMETERS::OPERATORS::LOGIC OPERATOR 1								
720	k0	::SETUP PARAMETERS::OPERATORS::LOGIC OPERATOR 1::INPUT	A	FALSE	>0000	FALSE; TRUE;	0	1	RECFG	RW
721	k1	::SETUP PARAMETERS::OPERATORS::LOGIC OPERATOR 1::INPUT	B	FALSE	>0000	FALSE; TRUE;	0	1	RECFG	RW

Tag	Mn	Text	Defau	EIASCI	Enum	Min	Max	CFG	RO
722	k2	::SETUP PARAMETERS::OPERATORS::LOGIC OPERATOR 1::INPUT C	FALSE	>0000	FALSE; TRUE;	0	1	RECFG	RW
724	k4	::SETUP PARAMETERS::OPERATORS::LOGIC OPERATOR 1::OUTPUT	FALSE	>0000	FALSE; TRUE;	0	1	NOCFG	RO
723	k3	::SETUP PARAMETERS::OPERATORS::LOGIC OPERATOR 1::TYPE	NOT(A)	0	NOT(A); AND(A,B,C); NAND(A,B,C); OR(A,B,C); NOR(A,B,C); XOR(A,B); 0-1 EDGE(A); 1-0 EDGE(A); AND(A,B,!C); OR(A,B,!C); FLIP-FLOP;	0	10	RECFG	RW
726	k6	::SETUP PARAMETERS::OPERATORS::LOGIC OPERATOR 2							
727	k7	::SETUP PARAMETERS::OPERATORS::LOGIC OPERATOR 2::INPUT A	FALSE	>0000	FALSE; TRUE;	0	1	RECFG	RW
728	k8	::SETUP PARAMETERS::OPERATORS::LOGIC OPERATOR 2::INPUT B	FALSE	>0000	FALSE; TRUE;	0	1	RECFG	RW
729	k9	::SETUP PARAMETERS::OPERATORS::LOGIC OPERATOR 2::INPUT C	FALSE	>0000	FALSE; TRUE;	0	1	RECFG	RW
731	kb	::SETUP PARAMETERS::OPERATORS::LOGIC OPERATOR 2::OUTPUT	FALSE	>0000	FALSE; TRUE;	0	1	NOCFG	RO
730	ka	::SETUP PARAMETERS::OPERATORS::LOGIC OPERATOR 2::TYPE	NOT(A)	0	NOT(A); AND(A,B,C); NAND(A,B,C); OR(A,B,C); NOR(A,B,C); XOR(A,B); 0-1 EDGE(A); 1-0 EDGE(A); AND(A,B,!C); OR(A,B,!C); FLIP-FLOP;	0	10	RECFG	RW
733	kd	::SETUP PARAMETERS::OPERATORS::LOGIC OPERATOR 3							
734	ke	::SETUP PARAMETERS::OPERATORS::LOGIC OPERATOR 3::INPUT A	FALSE	>0000	FALSE; TRUE;	0	1	RECFG	RW
735	kf	::SETUP PARAMETERS::OPERATORS::LOGIC OPERATOR 3::INPUT B	FALSE	>0000	FALSE; TRUE;	0	1	RECFG	RW
736	kg	::SETUP PARAMETERS::OPERATORS::LOGIC OPERATOR 3::INPUT C	FALSE	>0000	FALSE; TRUE;	0	1	RECFG	RW
738	ki	::SETUP PARAMETERS::OPERATORS::LOGIC OPERATOR 3::OUTPUT	FALSE	>0000	FALSE; TRUE;	0	1	NOCFG	RO
737	kh	::SETUP PARAMETERS::OPERATORS::LOGIC OPERATOR 3::TYPE	NOT(A)	0	NOT(A); AND(A,B,C); NAND(A,B,C); OR(A,B,C); NOR(A,B,C); XOR(A,B); 0-1 EDGE(A); 1-0 EDGE(A); AND(A,B,!C); OR(A,B,!C); FLIP-FLOP;	0	10	RECFG	RW
740	kk	::SETUP PARAMETERS::OPERATORS::LOGIC OPERATOR 4							
741	kl	::SETUP PARAMETERS::OPERATORS::LOGIC OPERATOR 4::INPUT A	FALSE	>0000	FALSE; TRUE;	0	1	RECFG	RW
742	km	::SETUP PARAMETERS::OPERATORS::LOGIC OPERATOR 4::INPUT B	FALSE	>0000	FALSE; TRUE;	0	1	RECFG	RW
743	kn	::SETUP PARAMETERS::OPERATORS::LOGIC OPERATOR 4::INPUT C	FALSE	>0000	FALSE; TRUE;	0	1	RECFG	RW
745	kp	::SETUP PARAMETERS::OPERATORS::LOGIC OPERATOR 4::OUTPUT	FALSE	>0000	FALSE; TRUE;	0	1	NOCFG	RO
744	ko	::SETUP PARAMETERS::OPERATORS::LOGIC OPERATOR 4::TYPE	NOT(A)	0	NOT(A); AND(A,B,C); NAND(A,B,C); OR(A,B,C); NOR(A,B,C); XOR(A,B); 0-1 EDGE(A); 1-0 EDGE(A); AND(A,B,!C); OR(A,B,!C); FLIP-FLOP;	0	10	RECFG	RW
691	j7	::SETUP PARAMETERS::OPERATORS::VALUE OPERATOR 1							
692	j8	::SETUP PARAMETERS::OPERATORS::VALUE OPERATOR 1::INPUT A	0.00%	0		-300	300	RECFG	RW
693	j9	::SETUP PARAMETERS::OPERATORS::VALUE OPERATOR 1::INPUT B	0.00%	0		-300	300	RECFG	RW
694	ja	::SETUP PARAMETERS::OPERATORS::VALUE OPERATOR 1::INPUT C	0.00%	0		-300	300	RECFG	RW
696	jc	::SETUP PARAMETERS::OPERATORS::VALUE OPERATOR 1::OUTPUT	0.00%	0		-300	300	NOCFG	RO
695	jb	::SETUP PARAMETERS::OPERATORS::VALUE OPERATOR 1::TYPE	IF(C) -A	0	IF(C) -A; ABS(A+B+C); SWITCH(A,B); (A*B)/C; A+B+C; A-B-C; B <= A <=C; A>B+/-C; A>=B; ABS(A)>B+/-C; ABS(A)>=B; A(1+B); IF(C) HOLD(A); BINARY DECODE; ON DELAY; OFF DELAY; TIMER; MINIMUM PULSE; PULSE TRAIN; WINDOW; UP/DWN COUNTER;	0	20	RECFG	RW
698	je	::SETUP PARAMETERS::OPERATORS::VALUE OPERATOR 2							
699	jf	::SETUP PARAMETERS::OPERATORS::VALUE OPERATOR 2::INPUT A	0.00%	0		-300	300	RECFG	RW
700	jg	::SETUP PARAMETERS::OPERATORS::VALUE OPERATOR 2::INPUT B	0.00%	0		-300	300	RECFG	RW
701	jh	::SETUP PARAMETERS::OPERATORS::VALUE OPERATOR 2::INPUT C	0.00%	0		-300	300	RECFG	RW
703	jj	::SETUP PARAMETERS::OPERATORS::VALUE OPERATOR 2::OUTPUT	0.00%	0		-300	300	NOCFG	RO
702	ji	::SETUP PARAMETERS::OPERATORS::VALUE OPERATOR 2::TYPE	IF(C) -A	0	IF(C) -A; ABS(A+B+C); SWITCH(A,B); (A*B)/C; A+B+C; A-B-C; B <= A <=C; A>B+/-C; A>=B; ABS(A)>B+/-C; ABS(A)>=B; A(1+B); IF(C) HOLD(A); BINARY DECODE; ON DELAY; OFF DELAY; TIMER; MINIMUM PULSE; PULSE TRAIN; WINDOW; UP/DWN COUNTER;	0	20	RECFG	RW
705	jl	::SETUP PARAMETERS::OPERATORS::VALUE OPERATOR 3							
706	jm	::SETUP PARAMETERS::OPERATORS::VALUE OPERATOR 3::INPUT A	0.00%	0		-300	300	RECFG	RW
707	jn	::SETUP PARAMETERS::OPERATORS::VALUE OPERATOR 3::INPUT B	0.00%	0		-300	300	RECFG	RW
708	jo	::SETUP PARAMETERS::OPERATORS::VALUE OPERATOR 3::INPUT C	0.00%	0		-300	300	RECFG	RW
710	jq	::SETUP PARAMETERS::OPERATORS::VALUE OPERATOR 3::OUTPUT	0.00%	0		-300	300	NOCFG	RO

Tag	Mn	Text	Defau	EIASCI	Enum	Min	Max	CFG	RO
709	jp	::SETUP PARAMETERS::OPERATORS::VALUE OPERATOR 3::TYPE	IF(C)	-A 0	IF(C) -A; ABS(A+B+C); SWITCH(A,B); (A*B)/C; A+B+C; A-B-C; B <= A <=C; A>B+/-C; A>=B; ABS(A)>B+/-C; ABS(A)>=B; A(1+B); IF(C) HOLD(A); BINARY DECODE; ON DELAY; OFF DELAY; TIMER; MINIMUM PULSE; PULSE TRAIN; WINDOW; UP/DWN COUNTER;	0	20	RECFG	RW
712	js	::SETUP PARAMETERS::OPERATORS::VALUE OPERATOR 4							
713	jt	::SETUP PARAMETERS::OPERATORS::VALUE OPERATOR 4::INPUT A	0.00%	0		-300	300	RECFG	RW
714	ju	::SETUP PARAMETERS::OPERATORS::VALUE OPERATOR 4::INPUT B	0.00%	0		-300	300	RECFG	RW
715	jv	::SETUP PARAMETERS::OPERATORS::VALUE OPERATOR 4::INPUT C	0.00%	0		-300	300	RECFG	RW
717	jx	::SETUP PARAMETERS::OPERATORS::VALUE OPERATOR 4::OUTPUT	0.00%	0		-300	300	NOCFG	RO
716	jw	::SETUP PARAMETERS::OPERATORS::VALUE OPERATOR 4::TYPE	IF(C)	-A 0	IF(C) -A; ABS(A+B+C); SWITCH(A,B); (A*B)/C; A+B+C; A-B-C; B <= A <=C; A>B+/-C; A>=B; ABS(A)>B+/-C; ABS(A)>=B; A(1+B); IF(C) HOLD(A); BINARY DECODE; ON DELAY; OFF DELAY; TIMER; MINIMUM PULSE; PULSE TRAIN; WINDOW; UP/DWN COUNTER;	0	20	RECFG	RW
501	dx	::SETUP PARAMETERS::OP-STATION							
510	e6	::SETUP PARAMETERS::OP-STATION::LOCAL RAMP							
516	ec	::SETUP PARAMETERS::OP-STATION::LOCAL RAMP::% S-RAMP	0.00%	0		0	100	RECFG	RW
511	e7	::SETUP PARAMETERS::OP-STATION::LOCAL RAMP::RAMP ACCEL TIME	10.0 SECS	10		0	600	RECFG	RW
512	e8	::SETUP PARAMETERS::OP-STATION::LOCAL RAMP::RAMP DECEL TIME	10.0 SECS	10		0	600	RECFG	RW
509	e5	::SETUP PARAMETERS::OP-STATION::LOCAL RAMP::RAMP OUTPUT	0.00%	0		-100	100	NOCFG	RO
633	hl	::SETUP PARAMETERS::OP-STATION::SET UP							
632	hk	::SETUP PARAMETERS::OP-STATION::SET UP::LOCAL KEY ENABLE	TRUE	>0001	FALSE; TRUE;	0	1	NOCFG	RI
507	e3	::SETUP PARAMETERS::OP-STATION::SET UP::SETPOINT	0.00%	0		0	100	RECFG	RW
502	dy	::SETUP PARAMETERS::OP-STATION::START UP VALUES							
506	e2	::SETUP PARAMETERS::OP-STATION::START UP VALUES::LOCAL	FALSE	>0000	FALSE; TRUE;	0	1	RECFG	RW
505	e1	::SETUP PARAMETERS::OP-STATION::START UP VALUES::PROGRAM	FALSE	>0000	FALSE; TRUE;	0	1	RECFG	RW
504	e0	::SETUP PARAMETERS::OP-STATION::START UP VALUES::REV DIRECTION	FALSE	>0000	FALSE; TRUE;	0	1	RECFG	RW
503	dz	::SETUP PARAMETERS::OP-STATION::START UP VALUES::SETPOINT	0.00%	0		0	100	RECFG	RW
530	eq	::SETUP PARAMETERS::PID							
544	f4	::SETUP PARAMETERS::PID::CLAMPED	TRUE	>0001	FALSE; TRUE;	0	1	RECFG	RW
531	er	::SETUP PARAMETERS::PID::DERIVATIVE TC	0.000 SECS	0		0	10	RECFG	RW
534	eu	::SETUP PARAMETERS::PID::ENABLE	TRUE	>0001	FALSE; TRUE;	0	1	RECFG	RW
557	fh	::SETUP PARAMETERS::PID::ERROR CALC							
532	es	::SETUP PARAMETERS::PID::ERROR CALC::DIVIDER 1	1	1		-3	3	RECFG	RW
533	et	::SETUP PARAMETERS::PID::ERROR CALC::DIVIDER 2	1	1		-3	3	RECFG	RW
500	dw	::SETUP PARAMETERS::PID::ERROR CALC::ERROR O/P	0.00%	0		-300	300	NOCFG	RO
536	ew	::SETUP PARAMETERS::PID::ERROR CALC::INPUT 1	0.00%	0		-300	300	RECFG	RW
537	ex	::SETUP PARAMETERS::PID::ERROR CALC::INPUT 2	0.00%	0		-300	300	RECFG	RW
553	fd	::SETUP PARAMETERS::PID::ERROR CALC::LIMIT	100.00%	100		0	300	RECFG	RW
550	fa	::SETUP PARAMETERS::PID::ERROR CALC::RATIO 1	1	1		-3	3	RECFG	RW
551	fb	::SETUP PARAMETERS::PID::ERROR CALC::RATIO 2	1	1		-3	3	RECFG	RW
601	gp	::SETUP PARAMETERS::PID::ERROR CALC::SIGN 1	POS	>0001	NEG; POS;	0	1	RECFG	RW
602	gq	::SETUP PARAMETERS::PID::ERROR CALC::SIGN 2	POS	>0001	NEG; POS;	0	1	RECFG	RW
535	ev	::SETUP PARAMETERS::PID::FILTER TC	0.100 SECS	0.1		0	10	RECFG	RW
545	f5	::SETUP PARAMETERS::PID::INPUT	0.00%	0		-300	300	RECFG	RW
538	ey	::SETUP PARAMETERS::PID::INT.DEFEAT	FALSE	>0000	FALSE; TRUE;	0	1	RECFG	RW
539	ez	::SETUP PARAMETERS::PID::INT.TIME CONST.	5.00 SECS	5		0	100	RECFG	RW
542	f2	::SETUP PARAMETERS::PID::NEGATIVE LIMIT	-100.00%	-100		-100	0	RECFG	RW
543	f3	::SETUP PARAMETERS::PID::O/P SCALER(TRIM)	1	1		-3	3	RECFG	RW
546	f6	::SETUP PARAMETERS::PID::OUTPUT	0.00%	0		-300	300	NOCFG	RO
547	f7	::SETUP PARAMETERS::PID::POSITIVE LIMIT	100.00%	100		0	100	RECFG	RW
558	fi	::SETUP PARAMETERS::PID::PROFILER							
540	f0	::SETUP PARAMETERS::PID::PROFILER::MIN PROFILE GAIN	20.00%	20		0	100	RECFG	RW
541	f1	::SETUP PARAMETERS::PID::PROFILER::MODE	0	0		0	4	RECFG	RW
554	fe	::SETUP PARAMETERS::PID::PROFILER::PROFILE INPUT	0.00%	0		0	100	RECFG	RW
555	ff	::SETUP PARAMETERS::PID::PROFILER::PROFILE MININPUT	0.00%	0		0	100	RECFG	RW
548	f8	::SETUP PARAMETERS::PID::PROFILER::PROFILED GAIN	0	0		0	100	RECFG	RW
549	f9	::SETUP PARAMETERS::PID::PROP.GAIN	1	1		0	100	RECFG	RW
91	2j	::SETUP PARAMETERS::PRESET							
95	2n	::SETUP PARAMETERS::PRESET::INPUT 1	0.00%	0		-300	300	RECFG	RW
96	2o	::SETUP PARAMETERS::PRESET::INPUT 2	25.00%	25		-300	300	RECFG	RW
97	2p	::SETUP PARAMETERS::PRESET::INPUT 3	50.00%	50		-300	300	RECFG	RW
98	2q	::SETUP PARAMETERS::PRESET::INPUT 4	100.00%	100		-300	300	RECFG	RW
99	2r	::SETUP PARAMETERS::PRESET::INPUT 5	0.00%	0		-300	300	RECFG	RW

Tag	Mn	Text	Defau	EIASCI	Enum	Min	Max	CFG	RO
100	2s	::SETUP PARAMETERS::PRESET::INPUT 6	-25.00%	-25		-300	300	RECFG	RW
101	2t	::SETUP PARAMETERS::PRESET::INPUT 7	-50.00%	-50		-300	300	RECFG	RW
102	2u	::SETUP PARAMETERS::PRESET::INPUT 8	-100.00%	-100		-300	300	RECFG	RW
109	31	::SETUP PARAMETERS::PRESET::INVERT O/P	FALSE	>0000	FALSE; TRUE;	0	1	RECFG	RW
110	32	::SETUP PARAMETERS::PRESET::PRESET O/P	0.00%	0		-300	300	NOCFG	RO
92	2k	::SETUP PARAMETERS::PRESET::SELECT 1	FALSE	>0000	FALSE; TRUE;	0	1	RECFG	RW
93	2l	::SETUP PARAMETERS::PRESET::SELECT 2	FALSE	>0000	FALSE; TRUE;	0	1	RECFG	RW
94	2m	::SETUP PARAMETERS::PRESET::SELECT 3	FALSE	>0000	FALSE; TRUE;	0	1	RECFG	RW
81	29	::SETUP PARAMETERS::RAISE/LOWER							
89	2h	::SETUP PARAMETERS::RAISE/LOWER::EXTERNAL RESET	FALSE	>0000	FALSE; TRUE;	0	1	RECFG	RW
86	2e	::SETUP PARAMETERS::RAISE/LOWER::LOWER INPUT	FALSE	>0000	FALSE; TRUE;	0	1	RECFG	RW
88	2g	::SETUP PARAMETERS::RAISE/LOWER::MAX VALUE	100.00%	100		-300	300	RECFG	RW
87	2f	::SETUP PARAMETERS::RAISE/LOWER::MIN VALUE	-100.00%	-100		-300	300	RECFG	RW
85	2d	::SETUP PARAMETERS::RAISE/LOWER::RAISE INPUT	FALSE	>0000	FALSE; TRUE;	0	1	RECFG	RW
678	iu	::SETUP PARAMETERS::RAISE/LOWER::RAISE/LOWER INIT	0.00%	0		-300	300	RECFG	RW
45	19	::SETUP PARAMETERS::RAISE/LOWER::RAISE/LOWER O/P	0.00%	0		-300	300	NOCFG	RO
83	2b	::SETUP PARAMETERS::RAISE/LOWER::RAMP RATE	60.0 SECS	60		0.1	600	RECFG	RW
82	2a	::SETUP PARAMETERS::RAISE/LOWER::RESET VALUE	0.00%	0		-100	100	RECFG	RW
53	1h	::SETUP PARAMETERS::RAMPS							
59	1n	::SETUP PARAMETERS::RAMPS::% S-RAMP	0.00%	0		0	100	RECFG	RW
61	1p	::SETUP PARAMETERS::RAMPS::AUTO RESET	TRUE	>0001	FALSE; TRUE;	0	1	RECFG	RW
62	1q	::SETUP PARAMETERS::RAMPS::EXTERNAL RESET	FALSE	>0000	FALSE; TRUE;	0	1	RECFG	RW
54	1i	::SETUP PARAMETERS::RAMPS::RAMP ACCEL TIME	10.0 SECS	10		0	600	RECFG	RW
55	1j	::SETUP PARAMETERS::RAMPS::RAMP DECEL TIME	10.0 SECS	10		0	600	RECFG	RW
57	1l	::SETUP PARAMETERS::RAMPS::RAMP HOLD	FALSE	>0000	FALSE; TRUE;	0	1	RECFG	RW
58	1m	::SETUP PARAMETERS::RAMPS::RAMP INPUT	0.00%	0		-100	100	RECFG	RW
47	1b	::SETUP PARAMETERS::RAMPS::RAMP OUTPUT	0.00%	0		-100	100	NOCFG	RO
56	1k	::SETUP PARAMETERS::RAMPS::RAMP QUENCH	FALSE	>0000	FALSE; TRUE;	0	1	RECFG	RW
21	0l	::SETUP PARAMETERS::RAMPS::RAMPING	FALSE	>0000	FALSE; TRUE;	0	1	NOCFG	RO
60	1o	::SETUP PARAMETERS::RAMPS::RAMPING THRESH.	1.00%	1		0	100	RECFG	RW
63	1r	::SETUP PARAMETERS::RAMPS::RESET VALUE	0.00%	0		-100	100	RECFG	RW
339	9f	::SETUP PARAMETERS::REF ENCODER							
658	ia	::SETUP PARAMETERS::REF ENCODER::CALC.REF.POSTION							
659	ib	::SETUP PARAMETERS::REF ENCODER::CALC.REF.POSTION::ENABLE	FALSE	>0000	FALSE; TRUE;	0	1	RECFG	RW
660	ic	::SETUP PARAMETERS::REF ENCODER::CALC.REF.POSTION::INPUT	0.00%	0		-100	100	RECFG	RW
661	id	::SETUP PARAMETERS::REF ENCODER::CALC.REF.POSTION::OUTPUT	0	0		-30000	30000	NOCFG	RO
603	gr	::SETUP PARAMETERS::REF ENCODER::INCH MENU							
604	gs	::SETUP PARAMETERS::REF ENCODER::INCH MENU::INCH ADVANCE	FALSE	>0000	FALSE; TRUE;	0	1	RECFG	RW
606	gu	::SETUP PARAMETERS::REF ENCODER::INCH MENU::INCH RATE	10	10		0	1000	RECFG	RW
605	gt	::SETUP PARAMETERS::REF ENCODER::INCH MENU::INCH RETARD	FALSE	>0000	FALSE; TRUE;	0	1	RECFG	RW
312	8o	::SETUP PARAMETERS::REF ENCODER::INPUT SCALING							
77	25	::SETUP PARAMETERS::REF ENCODER::INPUT SCALING::FBK ENCODER CNT	0	0		0	65535	NOCFG	RO
498	du	::SETUP PARAMETERS::REF ENCODER::INPUT SCALING::FBK.SCALE A	10000	10000		-30000	30000	RECFG	RW
499	dv	::SETUP PARAMETERS::REF ENCODER::INPUT SCALING::FBK.SCALE B	10000	10000		-30000	30000	RECFG	RW
359	9z	::SETUP PARAMETERS::REF ENCODER::INPUT SCALING::REF ENCODER CNT	0	0		0	65535	RECFG	RO
343	9j	::SETUP PARAMETERS::REF ENCODER::INPUT SCALING::REF SCALE A	10000	10000		-30000	30000	RECFG	RW
344	9k	::SETUP PARAMETERS::REF ENCODER::INPUT SCALING::REF SCALE B	10000	10000		-30000	30000	RECFG	RW
761	l5	::SETUP PARAMETERS::REF ENCODER::LENGTH MENU							
765	l9	::SETUP PARAMETERS::REF ENCODER::LENGTH MENU::LENGTH	0	0		-30000	30000	RECFG	RW
764	l8	::SETUP PARAMETERS::REF ENCODER::LENGTH MENU::LENGTH RATE	100	100		0	3000	RECFG	RW
762	l6	::SETUP PARAMETERS::REF ENCODER::LENGTH MENU::LENGTH SCALE	1	1		-15000	15000	RECFG	RW
763	l7	::SETUP PARAMETERS::REF ENCODER::LENGTH MENU::SUBTRACT LENGTH	FALSE	>0000	FALSE; TRUE;	0	1	RECFG	RW
608	gw	::SETUP PARAMETERS::REF ENCODER::PHASE							
342	9i	::SETUP PARAMETERS::REF ENCODER::PHASE::MAX POSITION ERR	100	100		-300	300	RECFG	RW
651	i3	::SETUP PARAMETERS::REF ENCODER::PHASE::OFFSET MENU							
447	cf	::SETUP PARAMETERS::REF ENCODER::PHASE::OFFSET MENU::OFFSET	0	0		-30000	30000	RECFG	RW
609	gx	::SETUP PARAMETERS::REF ENCODER::PHASE::OFFSET MENU::OFFSET SCALE	1	1		-15000	15000	RECFG	RW
670	im	::SETUP PARAMETERS::REF ENCODER::PHASE::OFFSET MENU::OFFSET TRIM	0	0		-32768	32767	RECFG	RW
611	gz	::SETUP PARAMETERS::REF ENCODER::PHASE::OVERFLOW	FALSE	>0000	FALSE; TRUE;	0	1	NOCFG	RO
337	9d	::SETUP PARAMETERS::REF ENCODER::PHASE::POS CALC ENABLE	FALSE	>0000	FALSE; TRUE;	0	1	RECFG	RW
338	9e	::SETUP PARAMETERS::REF ENCODER::PHASE::POSITION ERROR	0	0		-30000	30000	RECFG	RW
600	go	::SETUP PARAMETERS::REF ENCODER::PHASE::RESET	FALSE	>0000	FALSE; TRUE;	0	1	RECFG	RW
610	gy	::SETUP PARAMETERS::REF ENCODER::PHASE::SATURATED	FALSE	>0000	FALSE; TRUE;	0	1	NOCFG	RO
646	hy	::SETUP PARAMETERS::REF ENCODER::PHASE::TEST MODE							
647	hz	::SETUP PARAMETERS::REF ENCODER::PHASE::TEST MODE::ENABLE	FALSE	>0000	FALSE; TRUE;	0	1	RECFG	RW
652	i4	::SETUP PARAMETERS::REF ENCODER::PHASE::TEST MODE::ENABLE	FALSE	>0000	FALSE; TRUE;	0	1	RECFG	RW
653	i5	::SETUP PARAMETERS::REF ENCODER::PHASE::TEST MODE::OFFSET 1	500	500		-10000	10000	RECFG	RW
654	i6	::SETUP PARAMETERS::REF ENCODER::PHASE::TEST MODE::OFFSET 2	1000	1000		-10000	10000	RECFG	RW
650	i2	::SETUP PARAMETERS::REF ENCODER::PHASE::TEST MODE::PERIOD 1000 mSECS	1000			250	30000	RECFG	RW
655	i7	::SETUP PARAMETERS::REF ENCODER::PHASE::TEST MODE::PERIOD 1000 mSECS	1000			250	30000	RECFG	RW
648	i0	::SETUP PARAMETERS::REF ENCODER::PHASE::TEST MODE::SPEED SETPOINT 1	5.00%	5		-100	100	RECFG	RW

Tag	Mn	Text	Defau	EIASCI	Enum	Min	Max	CFG	RO
649	i1	::SETUP PARAMETERS::REF ENCODER::PHASE::TEST MODE::SPEED SETPOINT	10.00%	10		-100	100	RECFG	RW
607	gv	::SETUP PARAMETERS::REF ENCODER::REF.SPEED							
356	9w	::SETUP PARAMETERS::REF ENCODER::REF.SPEED::ENCODER LINES	2048	2048		0	8000	RECFG	RW
767	lb	::SETUP PARAMETERS::REF ENCODER::REF.SPEED::FILTER TC	1.00 SECS	1		0	300	RECFG	RW
768	lc	::SETUP PARAMETERS::REF ENCODER::REF.SPEED::FILTERED REF SPD	0.00%	0		-300	300	RECFG	RO
353	9t	::SETUP PARAMETERS::REF ENCODER::REF.SPEED::MAX SPEED RPM	1500 RPM	1500		0	6000	RECFG	RW
357	9x	::SETUP PARAMETERS::REF ENCODER::REF.SPEED::REFSPEED	0.00%	0		-300	300	RECFG	RW
783	lr	::SETUP PARAMETERS::REF ENCODER::REF.SPEED::SCALE REF.SPEED	TRUE	>0001	FALSE; TRUE;	0	1	RECFG	RW
188	58	::SETUP PARAMETERS::SETPOINT SUM 1							
193	5d	::SETUP PARAMETERS::SETPOINT SUM 1::DIVIDER 0	1	1		-3	3	RECFG	RW
194	5e	::SETUP PARAMETERS::SETPOINT SUM 1::DIVIDER 1	1	1		-3	3	RECFG	RW
196	5g	::SETUP PARAMETERS::SETPOINT SUM 1::INPUT 0	0.00%	0		-100	100	RECFG	RW
197	5h	::SETUP PARAMETERS::SETPOINT SUM 1::INPUT 1	0.00%	0		-100	100	RECFG	RW
198	5i	::SETUP PARAMETERS::SETPOINT SUM 1::INPUT 2	0.00%	0		-100	100	RECFG	RW
195	5f	::SETUP PARAMETERS::SETPOINT SUM 1::LIMIT	100.00%	100		0	300	RECFG	RW
189	59	::SETUP PARAMETERS::SETPOINT SUM 1::RATIO 0	1	1		-3	3	RECFG	RW
190	5a	::SETUP PARAMETERS::SETPOINT SUM 1::RATIO 1	1	1		-3	3	RECFG	RW
191	5b	::SETUP PARAMETERS::SETPOINT SUM 1::SIGN 0	POS	>0001	NEG; POS;	0	1	RECFG	RW
192	5c	::SETUP PARAMETERS::SETPOINT SUM 1::SIGN 1	POS	>0001	NEG; POS;	0	1	RECFG	RW
46	1a	::SETUP PARAMETERS::SETPOINT SUM 1::SPT SUM O/P 1	0.00%	0		-100	100	NOCFG	RO
363	a3	::SETUP PARAMETERS::SETPOINT SUM 2							
368	a8	::SETUP PARAMETERS::SETPOINT SUM 2::DIVIDER 0	1	1		-3	3	RECFG	RW
369	a9	::SETUP PARAMETERS::SETPOINT SUM 2::DIVIDER 1	1	1		-3	3	RECFG	RW
371	ab	::SETUP PARAMETERS::SETPOINT SUM 2::INPUT 0	0.00%	0		-100	100	RECFG	RW
372	ac	::SETUP PARAMETERS::SETPOINT SUM 2::INPUT 1	0.00%	0		-100	100	RECFG	RW
373	ad	::SETUP PARAMETERS::SETPOINT SUM 2::INPUT 2	0.00%	0		-100	100	RECFG	RW
370	aa	::SETUP PARAMETERS::SETPOINT SUM 2::LIMIT	100.00%	100		0	300	RECFG	RW
364	a4	::SETUP PARAMETERS::SETPOINT SUM 2::RATIO 0	1	1		-3	3	RECFG	RW
365	a5	::SETUP PARAMETERS::SETPOINT SUM 2::RATIO 1	1	1		-3	3	RECFG	RW
366	a6	::SETUP PARAMETERS::SETPOINT SUM 2::SIGN 0	POS	>0001	NEG; POS;	0	1	RECFG	RW
367	a7	::SETUP PARAMETERS::SETPOINT SUM 2::SIGN 1	POS	>0001	NEG; POS;	0	1	RECFG	RW
385	ap	::SETUP PARAMETERS::SETPOINT SUM 2::SPT SUM O/P 2	0.00%	0		-300	300	NOCFG	RO
374	ae	::SETUP PARAMETERS::SETPOINT SUM 3							
379	aj	::SETUP PARAMETERS::SETPOINT SUM 3::DIVIDER 0	1	1		-3	3	RECFG	RW
380	ak	::SETUP PARAMETERS::SETPOINT SUM 3::DIVIDER 1	1	1		-3	3	RECFG	RW
382	am	::SETUP PARAMETERS::SETPOINT SUM 3::INPUT 0	0.00%	0		-100	100	RECFG	RW
383	an	::SETUP PARAMETERS::SETPOINT SUM 3::INPUT 1	0.00%	0		-100	100	RECFG	RW
384	ao	::SETUP PARAMETERS::SETPOINT SUM 3::INPUT 2	0.00%	0		-100	100	RECFG	RW
381	al	::SETUP PARAMETERS::SETPOINT SUM 3::LIMIT	100.00%	100		0	300	RECFG	RW
375	af	::SETUP PARAMETERS::SETPOINT SUM 3::RATIO 0	1	1		-3	3	RECFG	RW
376	ag	::SETUP PARAMETERS::SETPOINT SUM 3::RATIO 1	1	1		-3	3	RECFG	RW
377	ah	::SETUP PARAMETERS::SETPOINT SUM 3::SIGN 0	POS	>0001	NEG; POS;	0	1	RECFG	RW
378	ai	::SETUP PARAMETERS::SETPOINT SUM 3::SIGN 1	POS	>0001	NEG; POS;	0	1	RECFG	RW
386	aq	::SETUP PARAMETERS::SETPOINT SUM 3::SPT SUM O/P 3	0.00%	0		-300	300	NOCFG	RO
160	4g	::SETUP PARAMETERS::SPEED LOOP							
779	ln	::SETUP PARAMETERS::SPEED LOOP::ADVANCED							
149	45	::SETUP PARAMETERS::SPEED LOOP::ADVANCED::1 / GAIN	70	70		0	255	RECFG	RI
675	ir	::SETUP PARAMETERS::SPEED LOOP::ADVANCED::ADAPTIVE P-GAIN	10	10		0	250	RECFG	RW
674	iq	::SETUP PARAMETERS::SPEED LOOP::ADVANCED::ADAPTIVE THRESH	0.00%	0		0	10	RECFG	RW
638	hq	::SETUP PARAMETERS::SPEED LOOP::ADVANCED::PWR LOSS CNTRL							
644	hw	::SETUP PARAMETERS::SPEED LOOP::ADVANCED::PWR LOSS CNTRL::ACCEL RATE	0.50%	0.5		0	300	RECFG	RW
657	i9	::SETUP PARAMETERS::SPEED LOOP::ADVANCED::PWR LOSS CNTRL::CONTROL BAND	20 VOLTS	20		0	1000	RECFG	RW
641	ht	::SETUP PARAMETERS::SPEED LOOP::ADVANCED::PWR LOSS CNTRL::DECEL RATE	2.50%	2.5		-100	100	RECFG	RW
639	hr	::SETUP PARAMETERS::SPEED LOOP::ADVANCED::PWR LOSS CNTRL::ENABLE	FALSE	>0000	FALSE; TRUE;	0	1	RECFG	RW
766	la	::SETUP PARAMETERS::SPEED LOOP::ADVANCED::PWR LOSS CNTRL::PWR LOSS ACTIVE	FALSE	>0000	FALSE; TRUE;	0	1	RECFG	RO
643	hv	::SETUP PARAMETERS::SPEED LOOP::ADVANCED::PWR LOSS CNTRL::TIME DELAY	30.00 SECS	30		0	30	RECFG	RW
640	hs	::SETUP PARAMETERS::SPEED LOOP::ADVANCED::PWR LOSS CNTRL::TRIP THRESHOLD	0 VOLTS	0		0	1000	RECFG	RW
769	ld	::SETUP PARAMETERS::SPEED LOOP::ADVANCED::ROTOR TEMP	100.00%	100		0	100	RECFG	RW
662	ie	::SETUP PARAMETERS::SPEED LOOP::ADVANCED::SPEED DMD FILTER	0.75	>02EE		0	1	NOCFG	RW
673	ip	::SETUP PARAMETERS::SPEED LOOP::ADVANCED::SPEED FBK FILTER	0.5	>01F4		0	1	NOCFG	RW
784	ls	::SETUP PARAMETERS::SPEED LOOP::ADVANCED::Tr COMP	0.00%	0		0	100	NOCFG	RO
770	le	::SETUP PARAMETERS::SPEED LOOP::ADVANCED::Tr COMP (COLD)	80.00%	80		50	100	RECFG	RW
51	1f	::SETUP PARAMETERS::SPEED LOOP::ENCODER	0 RPM	0		-20000	20000	NOCFG	RO
163	4j	::SETUP PARAMETERS::SPEED LOOP::INT. DEFEAT	FALSE	>0000	FALSE; TRUE;	0	1	RECFG	RW
8	8	::SETUP PARAMETERS::SPEED LOOP::SPEED ERROR	0.00%	0		-300	300	NOCFG	RO
7	7	::SETUP PARAMETERS::SPEED LOOP::SPEED FB UNFIL	0.00%	0		-300	300	NOCFG	RO
11	0b	::SETUP PARAMETERS::SPEED LOOP::SPEED FEEDBACK	0.00%	0		-300	300	NOCFG	RO

Tag	Mn	Text	Defau	EIASCI	Enum	Min	Max	CFG	RO
48	1c	::SETUP PARAMETERS::SPEED LOOP::SPEED SETPOINT	0.00%	0		-300	300	NOCFG	RO
170	4q	::SETUP PARAMETERS::SPEED LOOP::SPEED SETPOINTS							
175	4v	::SETUP PARAMETERS::SPEED LOOP::SPEED SETPOINTS::DIRECT ENABLE	FALSE	>0000	FALSE; TRUE;	0	1	RECFG	RW
172	4s	::SETUP PARAMETERS::SPEED LOOP::SPEED SETPOINTS::DIRECT RATIO	0.1	0.1		-1	1	RECFG	RW
173	4t	::SETUP PARAMETERS::SPEED LOOP::SPEED SETPOINTS::DIRECT SPT. MAX	100.00%	100		0	100	RECFG	RW
174	4u	::SETUP PARAMETERS::SPEED LOOP::SPEED SETPOINTS::DIRECT SPT. MIN	-100.00%	-100		-100	0	RECFG	RW
171	4r	::SETUP PARAMETERS::SPEED LOOP::SPEED SETPOINTS::DIRECT SPT1	0.00%	0		-300	300	NOCFG	RO
176	4w	::SETUP PARAMETERS::SPEED LOOP::SPEED SETPOINTS::MAIN SPD.SPT.	0.00%	0		-110	110	RECFG	RW
177	4x	::SETUP PARAMETERS::SPEED LOOP::SPEED SETPOINTS::MAX SPEED	100.00%	100		0	110	RECFG	RW
178	4y	::SETUP PARAMETERS::SPEED LOOP::SPEED SETPOINTS::MIN SPEED	-100.00%	-100		-110	0	RECFG	RW
50	1e	::SETUP PARAMETERS::SPEED LOOP::SPEED SETPOINTS::SEQ OUTPUT	0.00%	0		-100	100	NOCFG	RO
49	1d	::SETUP PARAMETERS::SPEED LOOP::SPEED SETPOINTS::SEQ RUN INPUT	0.00%	0		-100	100	NOCFG	RO
6	6	::SETUP PARAMETERS::SPEED LOOP::TOTAL SPD.DMD.	0.00%	0		-300	300	NOCFG	RO
778	lm	::SETUP PARAMETERS::SPEED LOOP::ZERO SPEED							
19	0j	::SETUP PARAMETERS::SPEED LOOP::ZERO SPEED::AT STANDSTILL	FALSE	>0000	FALSE; TRUE;	0	1	NOCFG	RO
18	0i	::SETUP PARAMETERS::SPEED LOOP::ZERO SPEED::AT ZERO SETPOINT	FALSE	>0000	FALSE; TRUE;	0	1	NOCFG	RO
17	0h	::SETUP PARAMETERS::SPEED LOOP::ZERO SPEED::AT ZERO SPEED	FALSE	>0000	FALSE; TRUE;	0	1	NOCFG	RO
132	3o	::SETUP PARAMETERS::SPEED LOOP::ZERO SPEED::ZERO SPD HYST	0.10%	0.1		0	100	RECFG	RW
252	70	::SETUP PARAMETERS::SPEED LOOP::ZERO SPEED::ZERO SPEED LEVEL	0.50%	0.5		0	100	RECFG	RW
317	8t	::SETUP PARAMETERS::S-RAMP							
253	71	::SETUP PARAMETERS::S-RAMP::ACCEL O/P	0	0		-300	300	NOCFG	RO
106	2y	::SETUP PARAMETERS::S-RAMP::ACCELERATION	10	10		0	150	RECFG	RW
316	8s	::SETUP PARAMETERS::S-RAMP::AT SPEED	FALSE	>0000	FALSE; TRUE;	0	1	NOCFG	RO
612	h0	::SETUP PARAMETERS::S-RAMP::AT SPEED LEVEL	1.00%	1		0	100	RECFG	RW
669	il	::SETUP PARAMETERS::S-RAMP::AUTO RESET	TRUE	>0001	FALSE; TRUE;	0	1	RECFG	RW
666	ii	::SETUP PARAMETERS::S-RAMP::DECELERATION	10	10		0	150	RECFG	RW
668	ik	::SETUP PARAMETERS::S-RAMP::ERROR THRESHOLD	0.50%	0.5		0	100	RECFG	RW
104	2w	::SETUP PARAMETERS::S-RAMP::EXTERNAL RESET	FALSE	>0000	FALSE; TRUE;	0	1	RECFG	RW
597	gl	::SETUP PARAMETERS::S-RAMP::INPUT	0.00%	0		-100	100	RECFG	RW
107	2z	::SETUP PARAMETERS::S-RAMP::JERK 1	10	10		0	150	RECFG	RW
663	if	::SETUP PARAMETERS::S-RAMP::JERK 2	10	10		0	150	RECFG	RW
664	ig	::SETUP PARAMETERS::S-RAMP::JERK 3	10	10		0	150	RECFG	RW
665	ih	::SETUP PARAMETERS::S-RAMP::JERK 4	10	10		0	150	RECFG	RW
598	gm	::SETUP PARAMETERS::S-RAMP::OUTPUT	0.00%	0		-100	100	NOCFG	RO
254	72	::SETUP PARAMETERS::S-RAMP::OVERSHOOT THRESH	5.00%	5		0	100	RECFG	RW
108	30	::SETUP PARAMETERS::S-RAMP::QUENCH	FALSE	>0000	FALSE; TRUE;	0	1	RECFG	RW
105	2x	::SETUP PARAMETERS::S-RAMP::RESET VALUE	0.00%	0		-100	100	RECFG	RW
667	ij	::SETUP PARAMETERS::S-RAMP::SYMMETRIC	TRUE	>0001	FALSE; TRUE;	0	1	RECFG	RW
119	3b	::SETUP PARAMETERS::STOP RATES							
26	0q	::SETUP PARAMETERS::STOP RATES::COAST STOP	FALSE	>0000	FALSE; TRUE;	0	1	NOCFG	RO
112	34	::SETUP PARAMETERS::STOP RATES::CONTACTOR DELAY	0.5 SECS	0.5		0	1000	RECFG	RW
124	3g	::SETUP PARAMETERS::STOP RATES::FAST STOP LIMIT	60.0 SECS	60		0	1000	RECFG	RW
123	3f	::SETUP PARAMETERS::STOP RATES::FAST STOP TIME	1.0 SECS	1		0	1000	RECFG	RW
777	ll	::SETUP PARAMETERS::STOP RATES::PILOT 590 MODE	FALSE	>0000	FALSE; TRUE;	0	1	RECFG	RW
122	3e	::SETUP PARAMETERS::STOP RATES::PRE-START DELAY	0.500 SECS	0.5		0	30	RECFG	RW
622	ha	::SETUP PARAMETERS::STOP RATES::PROG STOP I-LIM	150.00%	150		0	200	RECFG	RW
22	0m	::SETUP PARAMETERS::STOP RATES::PROGRAM STOP	FALSE	>0000	FALSE; TRUE;	0	1	NOCFG	RO
352	9s	::SETUP PARAMETERS::STOP RATES::READY DELAY	0.000 SECS	0		0	30	RECFG	RW
121	3d	::SETUP PARAMETERS::STOP RATES::RUN STOP LIMIT	60.0 SECS	60		0	1000	RECFG	RW
120	3c	::SETUP PARAMETERS::STOP RATES::RUN STOP TIME	10.0 SECS	10		0	1000	RECFG	RW
126	3i	::SETUP PARAMETERS::STOP RATES::STOP ZERO SPEED	1.00%	1		0	100	RECFG	RW
125	3h	::SETUP PARAMETERS::STOP RATES::USE SYSTEM RAMP	TRUE	>0001	FALSE; TRUE;	0	1	RECFG	RW
147	43	::SETUP PARAMETERS::TORQUE LOOP							
599	gn	::SETUP PARAMETERS::TORQUE LOOP::AUX TORQUE DMD	0.00%	0		-200	200	RECFG	RW
78	26	::SETUP PARAMETERS::TORQUE LOOP::CURRENT FEEDBACK	0.00%	0		-300	300	NOCFG	RO
613	h1	::SETUP PARAMETERS::TORQUE LOOP::DC LINK VOLTS	0 VOLTS	0		-30000	30000	NOCFG	RO
684	j0	::SETUP PARAMETERS::TORQUE LOOP::DC VOLTS UNFLT	0 VOLTS	0		-30000	30000	NOCFG	RO
480	dc	::SETUP PARAMETERS::TORQUE LOOP::TERMINAL VOLTS	0 VOLTS	0		-10000	10000	NOCFG	RO
596	gk	::SETUP PARAMETERS::TORQUE LOOP::TORQ.DMD.ISOLATE	FALSE	>0000	FALSE; TRUE;	0	1	RECFG	RW
9	9	::SETUP PARAMETERS::TORQUE LOOP::TORQUE DEMAND	0.00%	0		-300	300	NOCFG	RO
10	0a	::SETUP PARAMETERS::TORQUE LOOP::TORQUE FEEDBACK	0.00%	0		-300	300	NOCFG	RO
780	lo	::SETUP PARAMETERS::TORQUE LOOP::TORQUE LIMITS							
14	0e	::SETUP PARAMETERS::TORQUE LOOP::TORQUE LIMITS::ACTUAL NEG I LIM	0.00%	0		-300	300	NOCFG	RO
13	0d	::SETUP PARAMETERS::TORQUE LOOP::TORQUE LIMITS::ACTUAL POS I LIM	0.00%	0		-300	300	NOCFG	RO
16	0g	::SETUP PARAMETERS::TORQUE LOOP::TORQUE LIMITS::AT CURRENT LIMIT	FALSE	>0000	FALSE; TRUE;	0	1	NOCFG	RO
585	g9	::SETUP PARAMETERS::TORQUE LOOP::TORQUE LIMITS::CURRENT LIMIT	150.00%	150		50	150	RECFG	RW
158	4e	::SETUP PARAMETERS::TORQUE LOOP::TORQUE LIMITS::NEG TORQUE LIMIT	-150.00%	-150		-200	200	RECFG	RW
157	4d	::SETUP PARAMETERS::TORQUE LOOP::TORQUE LIMITS::POS TORQUE LIMIT	150.00%	150		-200	200	RECFG	RW
153	49	::SETUP PARAMETERS::TORQUE LOOP::TORQUE LIMITS::SYMMETRIC TQ.LIMT	TRUE	>0001	FALSE; TRUE;	0	1	RECFG	RW
242	6q	::SYSTEM							
244	6s	::SYSTEM::CONFIGURE I/O							

Tag	Mn	Text	Defau	EIASCI	Enum	Min	Max	CFG	RO
246	6u	::SYSTEM::CONFIGURE I/O::ANALOG INPUTS							
247	6v	::SYSTEM::CONFIGURE I/O::ANALOG INPUTS::ANIN 1 (C3)							
29	0t	::SYSTEM::CONFIGURE I/O::ANALOG INPUTS::ANIN 1 (C3)::ANIN 1 (C3)	0.00 VOLTS	0		-10	10	NOCFG	RO
248	6w	::SYSTEM::CONFIGURE I/O::ANALOG INPUTS::ANIN 1 (C3)::CALIBRATION	100.00%	100		-300	300	RECFG	RW
251	6z	::SYSTEM::CONFIGURE I/O::ANALOG INPUTS::ANIN 1 (C3)::DESTINATION TAG	6	0		0	800	RECFG	RI
249	6x	::SYSTEM::CONFIGURE I/O::ANALOG INPUTS::ANIN 1 (C3)::MAX VALUE	100.00%	100		-300	300	RECFG	RW
250	6y	::SYSTEM::CONFIGURE I/O::ANALOG INPUTS::ANIN 1 (C3)::MIN VALUE	-100.00%	-100		-300	300	RECFG	RW
358	9y	::SYSTEM::CONFIGURE I/O::ANALOG INPUTS::ANIN 1 (C3)::OFFSET	0.00%	0		-100	100	RECFG	RW
390	au	::SYSTEM::CONFIGURE I/O::ANALOG INPUTS::ANIN 1 (C3)::SCALED INPUT	0.00%	0		-300	300	NOCFG	RO
255	73	::SYSTEM::CONFIGURE I/O::ANALOG INPUTS::ANIN 3 (F2)							
31	0v	::SYSTEM::CONFIGURE I/O::ANALOG INPUTS::ANIN 3 (F2)::ANIN 3 (F2)	0.00 VOLTS	0		-10	10	NOCFG	RO
256	74	::SYSTEM::CONFIGURE I/O::ANALOG INPUTS::ANIN 3 (F2)::CALIBRATION	100.00%	100		-300	300	RECFG	RW
259	77	::SYSTEM::CONFIGURE I/O::ANALOG INPUTS::ANIN 3 (F2)::DESTINATION TAG	6	0		0	800	RECFG	RI
257	75	::SYSTEM::CONFIGURE I/O::ANALOG INPUTS::ANIN 3 (F2)::MAX VALUE	100.00%	100		-300	300	RECFG	RW
258	76	::SYSTEM::CONFIGURE I/O::ANALOG INPUTS::ANIN 3 (F2)::MIN VALUE	-100.00%	-100		-300	300	RECFG	RW
360	a0	::SYSTEM::CONFIGURE I/O::ANALOG INPUTS::ANIN 3 (F2)::OFFSET	0.00%	0		-100	100	RECFG	RW
391	av	::SYSTEM::CONFIGURE I/O::ANALOG INPUTS::ANIN 3 (F2)::SCALED INPUT	0.00%	0		-300	300	NOCFG	RO
260	78	::SYSTEM::CONFIGURE I/O::ANALOG INPUTS::ANIN 4 (F3)							
32	0w	::SYSTEM::CONFIGURE I/O::ANALOG INPUTS::ANIN 4 (F3)::ANIN 4 (F3)	0.00 VOLTS	0		-10	10	NOCFG	RO
261	79	::SYSTEM::CONFIGURE I/O::ANALOG INPUTS::ANIN 4 (F3)::CALIBRATION	100.00%	100		-300	300	RECFG	RW
264	7c	::SYSTEM::CONFIGURE I/O::ANALOG INPUTS::ANIN 4 (F3)::DESTINATION TAG	6	0		0	800	RECFG	RI
262	7a	::SYSTEM::CONFIGURE I/O::ANALOG INPUTS::ANIN 4 (F3)::MAX VALUE	100.00%	100		-300	300	RECFG	RW
263	7b	::SYSTEM::CONFIGURE I/O::ANALOG INPUTS::ANIN 4 (F3)::MIN VALUE	-100.00%	-100		-300	300	RECFG	RW
361	a1	::SYSTEM::CONFIGURE I/O::ANALOG INPUTS::ANIN 4 (F3)::OFFSET	0.00%	0		-100	100	RECFG	RW
392	aw	::SYSTEM::CONFIGURE I/O::ANALOG INPUTS::ANIN 4 (F3)::SCALED INPUT	0.00%	0		-300	300	NOCFG	RO
265	7d	::SYSTEM::CONFIGURE I/O::ANALOG INPUTS::ANIN 5 (F4)							
33	0x	::SYSTEM::CONFIGURE I/O::ANALOG INPUTS::ANIN 5 (F4)::ANIN 5 (F4)	0.00 VOLTS	0		-10	10	NOCFG	RO
266	7e	::SYSTEM::CONFIGURE I/O::ANALOG INPUTS::ANIN 5 (F4)::CALIBRATION	100.00%	100		-300	300	RECFG	RW
269	7h	::SYSTEM::CONFIGURE I/O::ANALOG INPUTS::ANIN 5 (F4)::DESTINATION TAG	6	0		0	800	RECFG	RI
267	7f	::SYSTEM::CONFIGURE I/O::ANALOG INPUTS::ANIN 5 (F4)::MAX VALUE	100.00%	100		-300	300	RECFG	RW
268	7g	::SYSTEM::CONFIGURE I/O::ANALOG INPUTS::ANIN 5 (F4)::MIN VALUE	-100.00%	-100		-300	300	RECFG	RW
362	a2	::SYSTEM::CONFIGURE I/O::ANALOG INPUTS::ANIN 5 (F4)::OFFSET	0.00%	0		-100	100	RECFG	RW
393	ax	::SYSTEM::CONFIGURE I/O::ANALOG INPUTS::ANIN 5 (F4)::SCALED INPUT	0.00%	0		-300	300	NOCFG	RO
671	in	::SYSTEM::CONFIGURE I/O::ANALOG INPUTS::ANIN FILTER	0.8	>0320		0	1	NOCFG	RW
270	7i	::SYSTEM::CONFIGURE I/O::ANALOG OUTPUTS							
271	7j	::SYSTEM::CONFIGURE I/O::ANALOG OUTPUTS::ANOUT 1 (C5)							
272	7k	::SYSTEM::CONFIGURE I/O::ANALOG OUTPUTS::ANOUT 1 (C5)::% TO GET 10.0V	100.00%	100		-300	300	RECFG	RW
354	9u	::SYSTEM::CONFIGURE I/O::ANALOG OUTPUTS::ANOUT 1 (C5)::ANOUT 1	0.00%	0		-300	300	RECFG	RW
34	0y	::SYSTEM::CONFIGURE I/O::ANALOG OUTPUTS::ANOUT 1 (C5)::ANOUT0100 (C5)	0.0 VOLTS	0		-10	10	NOCFG	RW
330	96	::SYSTEM::CONFIGURE I/O::ANALOG OUTPUTS::ANOUT 1 (C5)::CALIBRATION	100.00%	100		-200	200	RECFG	RW
676	is	::SYSTEM::CONFIGURE I/O::ANALOG OUTPUTS::ANOUT 1 (C5)::HARDWARE OFFSET	0.00%	0		-300	300	RECFG	RW
335	9b	::SYSTEM::CONFIGURE I/O::ANALOG OUTPUTS::ANOUT 1 (C5)::MODULUS	FALSE	>0000	FALSE; TRUE;	0	1	RECFG	RW
332	98	::SYSTEM::CONFIGURE I/O::ANALOG OUTPUTS::ANOUT 1 (C5)::OFFSET	0.00%	0		-300	300	RECFG	RW
273	7l	::SYSTEM::CONFIGURE I/O::ANALOG OUTPUTS::ANOUT 1 (C5)::SOURCE TAG	7	7		0	10000	RECFG	RW
274	7m	::SYSTEM::CONFIGURE I/O::ANALOG OUTPUTS::ANOUT 2 (F5)							
275	7n	::SYSTEM::CONFIGURE I/O::ANALOG OUTPUTS::ANOUT 2 (F5)::% TO GET 15.0V	100.00%	150		-300	300	RECFG	RW
355	9v	::SYSTEM::CONFIGURE I/O::ANALOG OUTPUTS::ANOUT 2 (F5)::ANOUT 2	0.00%	0		-300	300	RECFG	RW
35	0z	::SYSTEM::CONFIGURE I/O::ANALOG OUTPUTS::ANOUT 2 (F5)::ANOUT0200 (F5)	0.0 VOLTS	0		-10	10	NOCFG	RW
331	97	::SYSTEM::CONFIGURE I/O::ANALOG OUTPUTS::ANOUT 2 (F5)::CALIBRATION	100.00%	100		-200	200	RECFG	RW
677	it	::SYSTEM::CONFIGURE I/O::ANALOG OUTPUTS::ANOUT 2 (F5)::HARDWARE OFFSET	0.00%	0		-300	300	RECFG	RW
336	9c	::SYSTEM::CONFIGURE I/O::ANALOG OUTPUTS::ANOUT 2 (F5)::MODULUS	FALSE	>0000	FALSE; TRUE;	0	1	RECFG	RW
333	99	::SYSTEM::CONFIGURE I/O::ANALOG OUTPUTS::ANOUT 2 (F5)::OFFSET	0.00%	0		-300	300	RECFG	RW
276	7o	::SYSTEM::CONFIGURE I/O::ANALOG OUTPUTS::ANOUT 2 (F5)::SOURCE TAG	9	9		0	10000	RECFG	RW
306	8i	::SYSTEM::CONFIGURE I/O::BLOCK DIAGRAM							
389	at	::SYSTEM::CONFIGURE I/O::BLOCK DIAGRAM::HOME DEST	0	0		0	800	RECFG	RI
725	k5	::SYSTEM::CONFIGURE I/O::BLOCK DIAGRAM::LOGIC OP 1 DEST	0	0		0	800	RECFG	RI
732	kc	::SYSTEM::CONFIGURE I/O::BLOCK DIAGRAM::LOGIC OP 2 DEST	0	0		0	800	RECFG	RI
739	kj	::SYSTEM::CONFIGURE I/O::BLOCK DIAGRAM::LOGIC OP 3 DEST	0	0		0	800	RECFG	RI
746	kq	::SYSTEM::CONFIGURE I/O::BLOCK DIAGRAM::LOGIC OP 4 DEST	0	0		0	800	RECFG	RI
556	fg	::SYSTEM::CONFIGURE I/O::BLOCK DIAGRAM::Pid ERROR DEST	0	0		0	800	RECFG	RI
552	fc	::SYSTEM::CONFIGURE I/O::BLOCK DIAGRAM::Pid O/P DEST	0	0		0	800	RECFG	RI
341	9h	::SYSTEM::CONFIGURE I/O::BLOCK DIAGRAM::POSITION DEST	0	0		0	800	RECFG	RI
111	33	::SYSTEM::CONFIGURE I/O::BLOCK DIAGRAM::PRESET DEST	0	0		0	800	RECFG	RI
307	8j	::SYSTEM::CONFIGURE I/O::BLOCK DIAGRAM::RAISE/LOWER DEST	0	0		0	800	RECFG	RI
308	8k	::SYSTEM::CONFIGURE I/O::BLOCK DIAGRAM::RAMP O/P DEST	0	0		0	800	RECFG	RI
656	i8	::SYSTEM::CONFIGURE I/O::BLOCK DIAGRAM::REF.SPEED DEST	0	0		0	800	RECFG	RI
345	9l	::SYSTEM::CONFIGURE I/O::BLOCK DIAGRAM::SPT SUM1 OP DEST	0	0		0	800	RECFG	RI
346	9m	::SYSTEM::CONFIGURE I/O::BLOCK DIAGRAM::SPT SUM2 OP DEST	0	0		0	800	RECFG	RI
347	9n	::SYSTEM::CONFIGURE I/O::BLOCK DIAGRAM::SPT SUM3 OP DEST	0	0		0	800	RECFG	RI

Tag	Mn	Text	Defau	EIASCI	Enum	Min	Max	CFG	RO
103	2v	::SYSTEM::CONFIGURE I/O::BLOCK DIAGRAM::S-RAMP DEST	0	0		0	800	RECFG	RI
697	jd	::SYSTEM::CONFIGURE I/O::BLOCK DIAGRAM::VALUE OP 1 DEST	0	0		0	800	RECFG	RI
704	jk	::SYSTEM::CONFIGURE I/O::BLOCK DIAGRAM::VALUE OP 2 DEST	0	0		0	800	RECFG	RI
711	jr	::SYSTEM::CONFIGURE I/O::BLOCK DIAGRAM::VALUE OP 3 DEST	0	0		0	800	RECFG	RI
718	jy	::SYSTEM::CONFIGURE I/O::BLOCK DIAGRAM::VALUE OP 4 DEST	0	0		0	800	RECFG	RI
303	8f	::SYSTEM::CONFIGURE I/O::CONFIGURE 5703							
305	8h	::SYSTEM::CONFIGURE I/O::CONFIGURE 5703::DESTINATION TAG	0	0		0	800	RECFG	RI
304	8g	::SYSTEM::CONFIGURE I/O::CONFIGURE 5703::SOURCE TAG	176	176		0	800	RECFG	RW
245	6t	::SYSTEM::CONFIGURE I/O::CONFIGURE ENABLE	FALSE	>0000	FALSE; TRUE;	0	1	RECFG	RI
277	7p	::SYSTEM::CONFIGURE I/O::DIGITAL INPUTS							
278	7q	::SYSTEM::CONFIGURE I/O::DIGITAL INPUTS::DIGIN 1 (E2)							
281	7t	::SYSTEM::CONFIGURE I/O::DIGITAL INPUTS::DIGIN 1 (E2)::DESTINATION TAG	0	0		0	800	RECFG	RI
39	13	::SYSTEM::CONFIGURE I/O::DIGITAL INPUTS::DIGIN 1 (E2)::DIGIN 1 (E2)	FALSE	>0000	FALSE; TRUE;	0	1	NOCFG	RO
527	en	::SYSTEM::CONFIGURE I/O::DIGITAL INPUTS::DIGIN 1 (E2)::OUTPUT	0.00%	0		-300	300	RECFG	RW
280	7s	::SYSTEM::CONFIGURE I/O::DIGITAL INPUTS::DIGIN 1 (E2)::VALUE FOR FALSE	0.00%	0		-300	300	RECFG	RW
279	7r	::SYSTEM::CONFIGURE I/O::DIGITAL INPUTS::DIGIN 1 (E2)::VALUE FOR TRUE	0.01%	0.01		-300	300	RECFG	RW
282	7u	::SYSTEM::CONFIGURE I/O::DIGITAL INPUTS::DIGIN 2 (E3)							
285	7x	::SYSTEM::CONFIGURE I/O::DIGITAL INPUTS::DIGIN 2 (E3)::DESTINATION TAG	0	0		0	800	RECFG	RI
40	14	::SYSTEM::CONFIGURE I/O::DIGITAL INPUTS::DIGIN 2 (E3)::DIGIN 2 (E3)	FALSE	>0000	FALSE; TRUE;	0	1	NOCFG	RO
528	eo	::SYSTEM::CONFIGURE I/O::DIGITAL INPUTS::DIGIN 2 (E3)::OUTPUT	0.00%	0		-300	300	RECFG	RW
284	7w	::SYSTEM::CONFIGURE I/O::DIGITAL INPUTS::DIGIN 2 (E3)::VALUE FOR FALSE	0.00%	0		-300	300	RECFG	RW
283	7v	::SYSTEM::CONFIGURE I/O::DIGITAL INPUTS::DIGIN 2 (E3)::VALUE FOR TRUE	0.01%	0.01		-300	300	RECFG	RW
286	7y	::SYSTEM::CONFIGURE I/O::DIGITAL INPUTS::DIGIN 3 (E4)							
289	81	::SYSTEM::CONFIGURE I/O::DIGITAL INPUTS::DIGIN 3 (E4)::DESTINATION TAG	0	0		0	800	RECFG	RI
41	15	::SYSTEM::CONFIGURE I/O::DIGITAL INPUTS::DIGIN 3 (E4)::DIGIN 3 (E4)	FALSE	>0000	FALSE; TRUE;	0	1	NOCFG	RO
529	ep	::SYSTEM::CONFIGURE I/O::DIGITAL INPUTS::DIGIN 3 (E4)::OUTPUT	0.00%	0		-300	300	RECFG	RW
288	80	::SYSTEM::CONFIGURE I/O::DIGITAL INPUTS::DIGIN 3 (E4)::VALUE FOR FALSE	0.00%	0		-300	300	RECFG	RW
287	7z	::SYSTEM::CONFIGURE I/O::DIGITAL INPUTS::DIGIN 3 (E4)::VALUE FOR TRUE	0.01%	0.01		-300	300	RECFG	RW
522	ei	::SYSTEM::CONFIGURE I/O::DIGITAL INPUTS::DIGIN 4 (E5)							
525	el	::SYSTEM::CONFIGURE I/O::DIGITAL INPUTS::DIGIN 4 (E5)::DESTINATION TAG	0	0		0	800	RECFG	RI
521	eh	::SYSTEM::CONFIGURE I/O::DIGITAL INPUTS::DIGIN 4 (E5)::DIGIN 4 (E5)	FALSE	>0000	FALSE; TRUE;	0	1	NOCFG	RO
508	e4	::SYSTEM::CONFIGURE I/O::DIGITAL INPUTS::DIGIN 4 (E5)::OUTPUT	0.00%	0		-300	300	RECFG	RW
524	ek	::SYSTEM::CONFIGURE I/O::DIGITAL INPUTS::DIGIN 4 (E5)::VALUE FOR FALSE	0.00%	0		-300	300	RECFG	RW
523	ej	::SYSTEM::CONFIGURE I/O::DIGITAL INPUTS::DIGIN 4 (E5)::VALUE FOR TRUE	0.01%	0.01		-300	300	RECFG	RW
451	cj	::SYSTEM::CONFIGURE I/O::DIGITAL INPUTS::DIGIN B6 DEST	0	0		0	800	RECFG	RI
37	11	::SYSTEM::CONFIGURE I/O::DIGITAL INPUTS::DIGIN B6 JOG	FALSE	>0000	FALSE; TRUE;	0	1	NOCFG	RO
450	ci	::SYSTEM::CONFIGURE I/O::DIGITAL INPUTS::DIGIN B7 DEST	0	0		0	800	RECFG	RI
36	10	::SYSTEM::CONFIGURE I/O::DIGITAL INPUTS::DIGIN B7 START	FALSE	>0000	FALSE; TRUE;	0	1	NOCFG	RO
452	ck	::SYSTEM::CONFIGURE I/O::DIGITAL INPUTS::DIGIN B8 DEST	0	0		0	800	RECFG	RI
38	12	::SYSTEM::CONFIGURE I/O::DIGITAL INPUTS::DIGIN B8 ENABLE	FALSE	>0000	FALSE; TRUE;	0	1	NOCFG	RO
290	82	::SYSTEM::CONFIGURE I/O::DIGITAL OUTPUTS							
291	83	::SYSTEM::CONFIGURE I/O::DIGITAL OUTPUTS::DIGOUT 1 (E6)							
42	16	::SYSTEM::CONFIGURE I/O::DIGITAL OUTPUTS::DIGOUT 1 (E6)::DIGOUT 1 (E6)	FALSE	>0000	FALSE; TRUE;	0	1	NOCFG	RO
324	90	::SYSTEM::CONFIGURE I/O::DIGITAL OUTPUTS::DIGOUT 1 (E6)::INPUT	0.00%	0		-300	300	RECFG	RW
327	93	::SYSTEM::CONFIGURE I/O::DIGITAL OUTPUTS::DIGOUT 1 (E6)::INVERT	FALSE	>0000	FALSE; TRUE;	0	1	RECFG	RW
293	85	::SYSTEM::CONFIGURE I/O::DIGITAL OUTPUTS::DIGOUT 1 (E6)::MODULUS	FALSE	>0000	FALSE; TRUE;	0	1	RECFG	RW
321	8x	::SYSTEM::CONFIGURE I/O::DIGITAL OUTPUTS::DIGOUT 1 (E6)::OFFSET	0.00%	0		-300	300	RECFG	RW
294	86	::SYSTEM::CONFIGURE I/O::DIGITAL OUTPUTS::DIGOUT 1 (E6)::SOURCE TAG	17	17		0	800	RECFG	RW
292	84	::SYSTEM::CONFIGURE I/O::DIGITAL OUTPUTS::DIGOUT 1 (E6)::THRESHOLD	0.00%	0		-300	300	RECFG	RW
295	87	::SYSTEM::CONFIGURE I/O::DIGITAL OUTPUTS::DIGOUT 2 (E7)							
43	17	::SYSTEM::CONFIGURE I/O::DIGITAL OUTPUTS::DIGOUT 2 (E7)::DIGOUT 2 (E7)	FALSE	>0000	FALSE; TRUE;	0	1	NOCFG	RO
325	91	::SYSTEM::CONFIGURE I/O::DIGITAL OUTPUTS::DIGOUT 2 (E7)::INPUT	0.00%	0		-300	300	RECFG	RW
328	94	::SYSTEM::CONFIGURE I/O::DIGITAL OUTPUTS::DIGOUT 2 (E7)::INVERT	FALSE	>0000	FALSE; TRUE;	0	1	RECFG	RW
297	89	::SYSTEM::CONFIGURE I/O::DIGITAL OUTPUTS::DIGOUT 2 (E7)::MODULUS	FALSE	>0000	FALSE; TRUE;	0	1	RECFG	RW
322	8y	::SYSTEM::CONFIGURE I/O::DIGITAL OUTPUTS::DIGOUT 2 (E7)::OFFSET	0.00%	0		-300	300	RECFG	RW
298	8a	::SYSTEM::CONFIGURE I/O::DIGITAL OUTPUTS::DIGOUT 2 (E7)::SOURCE TAG	12	12		0	800	RECFG	RW
296	88	::SYSTEM::CONFIGURE I/O::DIGITAL OUTPUTS::DIGOUT 2 (E7)::THRESHOLD	0.00%	0		-300	300	RECFG	RW
299	8b	::SYSTEM::CONFIGURE I/O::DIGITAL OUTPUTS::DIGOUT 3 (E8)							
44	18	::SYSTEM::CONFIGURE I/O::DIGITAL OUTPUTS::DIGOUT 3 (E8)::DIGOUT 3 (E8)	FALSE	>0000	FALSE; TRUE;	0	1	NOCFG	RO
326	92	::SYSTEM::CONFIGURE I/O::DIGITAL OUTPUTS::DIGOUT 3 (E8)::INPUT	0.00%	0		-300	300	RECFG	RW
329	95	::SYSTEM::CONFIGURE I/O::DIGITAL OUTPUTS::DIGOUT 3 (E8)::INVERT	FALSE	>0000	FALSE; TRUE;	0	1	RECFG	RW
301	8d	::SYSTEM::CONFIGURE I/O::DIGITAL OUTPUTS::DIGOUT 3 (E8)::MODULUS	TRUE	>0001	FALSE; TRUE;	0	1	RECFG	RW
323	8z	::SYSTEM::CONFIGURE I/O::DIGITAL OUTPUTS::DIGOUT 3 (E8)::OFFSET	0.00%	0		-300	300	RECFG	RW
302	8e	::SYSTEM::CONFIGURE I/O::DIGITAL OUTPUTS::DIGOUT 3 (E8)::SOURCE TAG	559	559		0	800	RECFG	RW
300	8c	::SYSTEM::CONFIGURE I/O::DIGITAL OUTPUTS::DIGOUT 3 (E8)::THRESHOLD	0.00%	0		-300	300	RECFG	RW
179	4z	::SYSTEM::CONFIGURE I/O::INTERNAL LINKS							
181	51	::SYSTEM::CONFIGURE I/O::INTERNAL LINKS::LINK 1 DEST	0	0		0	800	RECFG	RI
180	50	::SYSTEM::CONFIGURE I/O::INTERNAL LINKS::LINK 1 SOURCE	0	0		0	800	RECFG	RI
571	fv	::SYSTEM::CONFIGURE I/O::INTERNAL LINKS::LINK 10 DEST	0	0		0	800	RECFG	RI
570	fu	::SYSTEM::CONFIGURE I/O::INTERNAL LINKS::LINK 10 SOURCE	0	0		0	800	RECFG	RI
573	fx	::SYSTEM::CONFIGURE I/O::INTERNAL LINKS::LINK 11 DEST	0	0		0	800	RECFG	RI

Tag	Mn	Text	Defau	EIASCI	Enum	Min	Max	CFG	RO
572	fw	::SYSTEM::CONFIGURE I/O::INTERNAL LINKS::LINK 11 SOURCE	0	0		0	800	RECFG	RI
575	fz	::SYSTEM::CONFIGURE I/O::INTERNAL LINKS::LINK 12 DEST	0	0		0	800	RECFG	RI
574	fy	::SYSTEM::CONFIGURE I/O::INTERNAL LINKS::LINK 12 SOURCE	0	0		0	800	RECFG	RI
577	g1	::SYSTEM::CONFIGURE I/O::INTERNAL LINKS::LINK 13 DEST	0	0		0	800	RECFG	RI
576	g0	::SYSTEM::CONFIGURE I/O::INTERNAL LINKS::LINK 13 SOURCE	0	0		0	800	RECFG	RI
579	g3	::SYSTEM::CONFIGURE I/O::INTERNAL LINKS::LINK 14 DEST	0	0		0	800	RECFG	RI
578	g2	::SYSTEM::CONFIGURE I/O::INTERNAL LINKS::LINK 14 SOURCE	0	0		0	800	RECFG	RI
581	g5	::SYSTEM::CONFIGURE I/O::INTERNAL LINKS::LINK 15 DEST	0	0		0	800	RECFG	RI
580	g4	::SYSTEM::CONFIGURE I/O::INTERNAL LINKS::LINK 15 SOURCE	0	0		0	800	RECFG	RI
583	g7	::SYSTEM::CONFIGURE I/O::INTERNAL LINKS::LINK 16 DEST	0	0		0	800	RECFG	RI
582	g6	::SYSTEM::CONFIGURE I/O::INTERNAL LINKS::LINK 16 SOURCE	0	0		0	800	RECFG	RI
183	53	::SYSTEM::CONFIGURE I/O::INTERNAL LINKS::LINK 2 DEST	0	0		0	800	RECFG	RI
182	52	::SYSTEM::CONFIGURE I/O::INTERNAL LINKS::LINK 2 SOURCE	0	0		0	800	RECFG	RI
185	55	::SYSTEM::CONFIGURE I/O::INTERNAL LINKS::LINK 3 DEST	0	0		0	800	RECFG	RI
184	54	::SYSTEM::CONFIGURE I/O::INTERNAL LINKS::LINK 3 SOURCE	0	0		0	800	RECFG	RI
187	57	::SYSTEM::CONFIGURE I/O::INTERNAL LINKS::LINK 4 DEST	0	0		0	800	RECFG	RI
186	56	::SYSTEM::CONFIGURE I/O::INTERNAL LINKS::LINK 4 SOURCE	0	0		0	800	RECFG	RI
561	fl	::SYSTEM::CONFIGURE I/O::INTERNAL LINKS::LINK 5 DEST	0	0		0	800	RECFG	RI
560	fk	::SYSTEM::CONFIGURE I/O::INTERNAL LINKS::LINK 5 SOURCE	0	0		0	800	RECFG	RI
563	fn	::SYSTEM::CONFIGURE I/O::INTERNAL LINKS::LINK 6 DEST	0	0		0	800	RECFG	RI
562	fm	::SYSTEM::CONFIGURE I/O::INTERNAL LINKS::LINK 6 SOURCE	0	0		0	800	RECFG	RI
565	fp	::SYSTEM::CONFIGURE I/O::INTERNAL LINKS::LINK 7 DEST	0	0		0	800	RECFG	RI
564	fo	::SYSTEM::CONFIGURE I/O::INTERNAL LINKS::LINK 7 SOURCE	0	0		0	800	RECFG	RI
567	fr	::SYSTEM::CONFIGURE I/O::INTERNAL LINKS::LINK 8 DEST	0	0		0	800	RECFG	RI
566	fq	::SYSTEM::CONFIGURE I/O::INTERNAL LINKS::LINK 8 SOURCE	0	0		0	800	RECFG	RI
569	ft	::SYSTEM::CONFIGURE I/O::INTERNAL LINKS::LINK 9 DEST	0	0		0	800	RECFG	RI
568	fs	::SYSTEM::CONFIGURE I/O::INTERNAL LINKS::LINK 9 SOURCE	0	0		0	800	RECFG	RI
479	db	::SYSTEM::CO-PROCESSOR							
463	cv	::SYSTEM::CO-PROCESSOR::	0.00%	0		-100	100	RECFG	RW
464	cw	::SYSTEM::CO-PROCESSOR::	0.00%	0		-100	100	RECFG	RW
465	cx	::SYSTEM::CO-PROCESSOR::	0.00%	0		-100	100	RECFG	RW
466	cy	::SYSTEM::CO-PROCESSOR::	0.00%	0		-100	100	RECFG	RW
467	cz	::SYSTEM::CO-PROCESSOR::	0.00%	0		-100	100	RECFG	RW
468	d0	::SYSTEM::CO-PROCESSOR::	0.00%	0		-100	100	RECFG	RW
469	d1	::SYSTEM::CO-PROCESSOR::	0.00%	0		-100	100	RECFG	RW
470	d2	::SYSTEM::CO-PROCESSOR::	0.00%	0		-100	100	RECFG	RW
471	d3	::SYSTEM::CO-PROCESSOR::	0.00%	0		-100	100	RECFG	RW
472	d4	::SYSTEM::CO-PROCESSOR::	0.00%	0		-100	100	RECFG	RW
473	d5	::SYSTEM::CO-PROCESSOR::	FALSE	>0000	FALSE; TRUE;	0	1	RECFG	RW
474	d6	::SYSTEM::CO-PROCESSOR::	FALSE	>0000	FALSE; TRUE;	0	1	RECFG	RW
475	d7	::SYSTEM::CO-PROCESSOR::	FALSE	>0000	FALSE; TRUE;	0	1	RECFG	RW
476	d8	::SYSTEM::CO-PROCESSOR::	FALSE	>0000	FALSE; TRUE;	0	1	RECFG	RW
477	d9	::SYSTEM::CO-PROCESSOR::	FALSE	>0000	FALSE; TRUE;	0	1	RECFG	RW
478	da	::SYSTEM::CO-PROCESSOR::	FALSE	>0000	FALSE; TRUE;	0	1	RECFG	RW
348	9o	::SYSTEM::PEEK DIAGNOSTIC							
349	9p	::SYSTEM::PEEK DIAGNOSTIC::PEEK DATA	[0xC000] = 0000	0xC000		0	65535	RECFG	RW
350	9q	::SYSTEM::PEEK DIAGNOSTIC::PEEK SCALE	100.00%	100		-300	300	RECFG	RW
340	9g	::SYSTEM::PEEK DIAGNOSTIC::PEEK TAG	7	7		0	800	RECFG	RI
683	iz	::SYSTEM::PERSISTENT DATA							
682	iy	::SYSTEM::PERSISTENT DATA::/WRITE	FALSE	>0000	FALSE; TRUE;	0	1	RECFG	RW
681	ix	::SYSTEM::PERSISTENT DATA::COUNT	0	0		0	30000	NOCFG	RO
680	iw	::SYSTEM::PERSISTENT DATA::TAG No 2	0	0		0	800	RECFG	RI
679	iv	::SYSTEM::PERSISTENT DATA::TAG No 1	0	0		0	800	RECFG	RI
310	8m	::SYSTEM::RESERVED							
311	8n	::SYSTEM::RESERVED::ENG USE ONLY							
485	dh	::SYSTEM::RESERVED::ENG USE ONLY::AUTOTUNE MISC							
488	dk	::SYSTEM::RESERVED::ENG USE ONLY::AUTOTUNE MISC::AUTO RAMP INCRMT	2	2		1	50	RECFG	RW
492	do	::SYSTEM::RESERVED::ENG USE ONLY::AUTOTUNE MISC::AUTOCAL MAX RPM 0 RPM		0		-30000	30000	NOCFG	RO
487	dj	::SYSTEM::RESERVED::ENG USE ONLY::AUTOTUNE MISC::kimr_int	1000	1000		0	32000	RECFG	RW
489	dl	::SYSTEM::RESERVED::ENG USE ONLY::AUTOTUNE MISC::LINK V FILT GAIN	500	500		0	32000	RECFG	RW
494	dq	::SYSTEM::RESERVED::ENG USE ONLY::AUTOTUNE MISC::LOAD FACTOR @200	90.00%	90		50	100	RECFG	RW
493	dp	::SYSTEM::RESERVED::ENG USE ONLY::AUTOTUNE MISC::LOAD FACTOR @80	95.00%	95		50	100	RECFG	RW
628	hg	::SYSTEM::RESERVED::ENG USE ONLY::AUTOTUNE MISC::MIN LINK V RATIO	85.00%	85		50	100	RECFG	RW
490	dm	::SYSTEM::RESERVED::ENG USE ONLY::AUTOTUNE MISC::TERM V FILT GAIN	500	500		0	32000	RECFG	RW
491	dn	::SYSTEM::RESERVED::ENG USE ONLY::AUTOTUNE MISC::TERM V FLTGN DSP	50	50		0	32000	RECFG	RW
626	he	::SYSTEM::RESERVED::ENG USE ONLY::DIAGNOSTICS RESD							
627	hf	::SYSTEM::RESERVED::ENG USE ONLY::DIAGNOSTICS RESD::RUN SLIP F FLAG	FALSE	>0000	FALSE; TRUE;	0	1	NOCFG	RW
625	hd	::SYSTEM::RESERVED::ENG USE ONLY::DIAGNOSTICS RESD::SLIP FREQUENCY	0.00 Hz	0		-300	300	NOCFG	RO
446	ce	::SYSTEM::RESERVED::ENG USE ONLY::FIELD WK VARS							
454	cm	::SYSTEM::RESERVED::ENG USE ONLY::FIELD WK VARS::MAG I SCALE 0	100.00%	100		100	100	NOCFG	RI
455	cn	::SYSTEM::RESERVED::ENG USE ONLY::FIELD WK VARS::MAG I SCALE 1	77.00%	77		0	100	NOCFG	RI

Tag	Mn	Text	Defau	EIASCI	Enum	Min	Max	CFG	RO
456	co	::SYSTEM::RESERVED::ENG USE ONLY::FIELD WK VARS::MAG I SCALE 2	63.00%	63		0	100	NOCFG	RI
457	cp	::SYSTEM::RESERVED::ENG USE ONLY::FIELD WK VARS::MAG I SCALE 3	50.00%	50		0	100	NOCFG	RI
586	ga	::SYSTEM::RESERVED::ENG USE ONLY::FIELD WK VARS::MAG I SCALE 4	40.00%	40		0	100	NOCFG	RI
459	cr	::SYSTEM::RESERVED::ENG USE ONLY::FIELD WK VARS::MAG I SCALE 5	35.00%	35		0	100	NOCFG	RI
460	cs	::SYSTEM::RESERVED::ENG USE ONLY::FIELD WK VARS::MAG I SCALE 6	30.00%	30		0	100	NOCFG	RI
461	ct	::SYSTEM::RESERVED::ENG USE ONLY::FIELD WK VARS::MAG I SCALE 7	25.00%	25		0	100	NOCFG	RI
462	cu	::SYSTEM::RESERVED::ENG USE ONLY::FIELD WK VARS::MAG I SCALE 8	20.00%	20		0	100	NOCFG	RI
630	hi	::SYSTEM::RESERVED::ENG USE ONLY::FIELD WK VARS::MAG I SCALE 9	11.10%	11.1		0	100	NOCFG	RI
587	gb	::SYSTEM::RESERVED::ENG USE ONLY::FIELD WK VARS::TR SCALE 0	100.00%	100		100	100	NOCFG	RI
588	gc	::SYSTEM::RESERVED::ENG USE ONLY::FIELD WK VARS::TR SCALE 1	100.00%	100		20	300	NOCFG	RI
589	gd	::SYSTEM::RESERVED::ENG USE ONLY::FIELD WK VARS::TR SCALE 2	100.00%	100		20	300	NOCFG	RI
590	ge	::SYSTEM::RESERVED::ENG USE ONLY::FIELD WK VARS::TR SCALE 3	100.00%	100		20	300	NOCFG	RI
591	gf	::SYSTEM::RESERVED::ENG USE ONLY::FIELD WK VARS::TR SCALE 4	100.00%	100		20	300	NOCFG	RI
592	gg	::SYSTEM::RESERVED::ENG USE ONLY::FIELD WK VARS::TR SCALE 5	100.00%	100		20	300	NOCFG	RI
593	gh	::SYSTEM::RESERVED::ENG USE ONLY::FIELD WK VARS::TR SCALE 6	100.00%	100		20	300	NOCFG	RI
594	gi	::SYSTEM::RESERVED::ENG USE ONLY::FIELD WK VARS::TR SCALE 7	100.00%	100		20	300	NOCFG	RI
595	gj	::SYSTEM::RESERVED::ENG USE ONLY::FIELD WK VARS::TR SCALE 8	100.00%	100		20	300	NOCFG	RI
631	hj	::SYSTEM::RESERVED::ENG USE ONLY::FIELD WK VARS::TR SCALE 9	100.00%	100		20	300	NOCFG	RI
400	b4	::SYSTEM::RESERVED::ENG USE ONLY::Id Iq LOOPS							
402	b6	::SYSTEM::RESERVED::ENG USE ONLY::Id Iq LOOPS::Id INT GAIN	500	500		0	32767	NOCFG	RW
401	b5	::SYSTEM::RESERVED::ENG USE ONLY::Id Iq LOOPS::Id PROP GAIN	2	2		0	32767	NOCFG	RW
407	bb	::SYSTEM::RESERVED::ENG USE ONLY::Id Iq LOOPS::Iq INT GAIN	10000	10000		0	32767	NOCFG	RW
403	b7	::SYSTEM::RESERVED::ENG USE ONLY::Id Iq LOOPS::MAX Id DEMAND	7500	7500		0	10000	NOCFG	RW
415	bj	::SYSTEM::RESERVED::ENG USE ONLY::Id Iq LOOPS::MAX Id HI word	0	0		0	100	NOCFG	RW
405	b9	::SYSTEM::RESERVED::ENG USE ONLY::Id Iq LOOPS::MAX Id INTEGRAL	7500	7500		0	10000	NOCFG	RW
408	bc	::SYSTEM::RESERVED::ENG USE ONLY::Id Iq LOOPS::MAX Iq INTEGRAL	4000	4000		0	5000	NOCFG	RW
404	b8	::SYSTEM::RESERVED::ENG USE ONLY::Id Iq LOOPS::MIN Id DEMAND	-2000	-2000		-5000	-1	NOCFG	RW
416	bk	::SYSTEM::RESERVED::ENG USE ONLY::Id Iq LOOPS::MIN Id HI word	-1	-1		-1	0	NOCFG	RW
406	ba	::SYSTEM::RESERVED::ENG USE ONLY::Id Iq LOOPS::MIN Id INTEGRAL	-2000	-2000		-5000	0	NOCFG	RW
409	bd	::SYSTEM::RESERVED::ENG USE ONLY::Id Iq LOOPS::MIN Iq INTEGRAL	-4000	-4000		-5000	0	NOCFG	RW
410	be	::SYSTEM::RESERVED::ENG USE ONLY::MISCELLANEOUS							
169	4p	::SYSTEM::RESERVED::ENG USE ONLY::MISCELLANEOUS::584S CHASSIS	TRUE	>0001	FALSE; TRUE;	0	1	NOCFG	RI
414	bi	::SYSTEM::RESERVED::ENG USE ONLY::MISCELLANEOUS::AD NEG THRESHOLD	6	6		0	100	NOCFG	RW
413	bh	::SYSTEM::RESERVED::ENG USE ONLY::MISCELLANEOUS::AD POS THRESHOLD	6	6		0	100	NOCFG	RW
411	bf	::SYSTEM::RESERVED::ENG USE ONLY::MISCELLANEOUS::BRAKE THRESHOLD	936	936		0	1023	NOCFG	RW
315	8r	::SYSTEM::RESERVED::ENG USE ONLY::MISCELLANEOUS::CYCLE TIME	0	0		0	65535	NOCFG	RO
154	4a	::SYSTEM::RESERVED::ENG USE ONLY::MISCELLANEOUS::DISABLE CO-PRO	FALSE	>0000	FALSE; TRUE;	0	1	NOCFG	RW
168	4o	::SYSTEM::RESERVED::ENG USE ONLY::MISCELLANEOUS::DRIVE STATUS	FALSE	>0000	FALSE; TRUE;	0	1	NOCFG	RO
495	dr	::SYSTEM::RESERVED::ENG USE ONLY::MISCELLANEOUS::IFB ADJUST	115.00%	115		50	150	RECFG	RI
412	bg	::SYSTEM::RESERVED::ENG USE ONLY::MISCELLANEOUS::MODN INDEX	9000	9000		0	12000	NOCFG	RW
155	4b	::SYSTEM::RESERVED::ENG USE ONLY::MISCELLANEOUS::RESET EAT	FALSE	>0000	FALSE; TRUE;	0	1	NOCFG	RI
167	4n	::SYSTEM::RESERVED::ENG USE ONLY::MISCELLANEOUS::RESET VEC VARS	TRUE	>0001	FALSE; TRUE;	0	1	NOCFG	RW
319	8v	::SYSTEM::RESERVED::ENG USE ONLY::MISCELLANEOUS::SPD.FBK. TC	0.10 SECS	0.1		0	300	RECFG	RW
351	9r	::SYSTEM::RESERVED::ENG USE ONLY::MISCELLANEOUS::SYS TIME	0x0000	>0000		0	65535	NOCFG	RO
64	1s	::SYSTEM::RESERVED::ENG USE ONLY::MISCELLANEOUS::SYSTEM RESET	FALSE	>0000	FALSE; TRUE;	0	1	NOCFG	RO
497	dt	::SYSTEM::RESERVED::ENG USE ONLY::MISCELLANEOUS::TICK LENGTH	0	0		0	65.535	NOCFG	RO
320	8w	::SYSTEM::RESERVED::ENG USE ONLY::MISCELLANEOUS::TORQUE.FBK.TC	0.10 SECS	0.1		0	300	RECFG	RW
624	hc	::SYSTEM::RESERVED::ENG USE ONLY::MISCELLANEOUS::TOTAL TRIP COUNT	0x0000	>0000		0	65535	NOCFG	RW
621	h9	::SYSTEM::RESERVED::ENG USE ONLY::TERM V CONTROL							
614	h2	::SYSTEM::RESERVED::ENG USE ONLY::TERM V CONTROL::% LOAD @BASE SPD	5.00%	5		0	10	RECFG	RW
620	h8	::SYSTEM::RESERVED::ENG USE ONLY::TERM V CONTROL::FAST RESPONSE	102.50%	102.5		100	115	RECFG	RW
618	h6	::SYSTEM::RESERVED::ENG USE ONLY::TERM V CONTROL::iq @TV INTGN=MAX	200.00%	200		150	300	RECFG	RW
617	h5	::SYSTEM::RESERVED::ENG USE ONLY::TERM V CONTROL::iq @TV INTGN=MIN	100.00%	100		10	150	RECFG	RW
619	h7	::SYSTEM::RESERVED::ENG USE ONLY::TERM V CONTROL::LOOP RESPNSE=nTr	10	10		4	30000	RECFG	RW
616	h4	::SYSTEM::RESERVED::ENG USE ONLY::TERM V CONTROL::SPD @ TV INT SC	50.00%	50		10	100	RECFG	RW
623	hb	::SYSTEM::RESERVED::ENG USE ONLY::TERM V CONTROL::TERM V INTEGRAL	0.00%	0		-300	300	NOCFG	RO
615	h3	::SYSTEM::RESERVED::ENG USE ONLY::TERM V CONTROL::TVolts INT RANGE	50.00%	50		0	80	RECFG	RW
417	bl	::SYSTEM::RESERVED::ENG USE ONLY::TEST FUNCTIONS							
423	br	::SYSTEM::RESERVED::ENG USE ONLY::TEST FUNCTIONS::CURR AMPLITUDE	200	200		0	5000	RECFG	RW
424	bs	::SYSTEM::RESERVED::ENG USE ONLY::TEST FUNCTIONS::CURRENT OFFSET	0	0		-5000	5000	RECFG	RW
422	bq	::SYSTEM::RESERVED::ENG USE ONLY::TEST FUNCTIONS::CURRENT PERIOD	40	40		2	10000	RECFG	RW
636	ho	::SYSTEM::RESERVED::ENG USE ONLY::TEST FUNCTIONS::IMPLSE CNT LNGTH	30000	30000		0	30000	RECFG	RW
637	hp	::SYSTEM::RESERVED::ENG USE ONLY::TEST FUNCTIONS::IMPULSE HEIGHT	30000	30000		0	30000	RECFG	RW
634	hm	::SYSTEM::RESERVED::ENG USE ONLY::TEST FUNCTIONS::MEAS SPD LOOP RES	FALSE	>0000	FALSE; TRUE;	0	1	RECFG	RW
635	hn	::SYSTEM::RESERVED::ENG USE ONLY::TEST FUNCTIONS::NO OF AVERAGES	30000	30000		0	30000	RECFG	RW
418	bm	::SYSTEM::RESERVED::ENG USE ONLY::TEST FUNCTIONS::SELECT FUNCTION	0	0		0	9	NOCFG	RI
420	bo	::SYSTEM::RESERVED::ENG USE ONLY::TEST FUNCTIONS::SPEED AMPLITUDE	500	500		0	30000	RECFG	RW
421	bp	::SYSTEM::RESERVED::ENG USE ONLY::TEST FUNCTIONS::SPEED OFFSET	0	0		-11000	11000	RECFG	RW
419	bn	::SYSTEM::RESERVED::ENG USE ONLY::TEST FUNCTIONS::SPEED PERIOD	1000	1000		2	32767	RECFG	RW
425	bt	::SYSTEM::RESERVED::ENG USE ONLY::TRACE							
428	bw	::SYSTEM::RESERVED::ENG USE ONLY::TRACE::NO OF PASSES	1	1		1	254	NOCFG	RI

Tag	Mn	Text	Defau	EIASCI	Enum	Min	Max	CFG	RO
427	bv	::SYSTEM::RESERVED::ENG USE ONLY::TRACE::PRESET COUNT	0	0		0	65535	NOCFG	RI
430	by	::SYSTEM::RESERVED::ENG USE ONLY::TRACE::TRACE ADDRESS 1	0x0000	>0000		0	65535	NOCFG	RI
431	bz	::SYSTEM::RESERVED::ENG USE ONLY::TRACE::TRACE ADDRESS 2	0x0000	>0000		0	65535	NOCFG	RI
432	c0	::SYSTEM::RESERVED::ENG USE ONLY::TRACE::TRACE ADDRESS 3	0x0000	>0000		0	65535	NOCFG	RI
433	c1	::SYSTEM::RESERVED::ENG USE ONLY::TRACE::TRACE ADDRESS 4	0x0000	>0000		0	65535	NOCFG	RI
434	c2	::SYSTEM::RESERVED::ENG USE ONLY::TRACE::TRACE ADDRESS 5	0x0000	>0000		0	65535	NOCFG	RI
435	c3	::SYSTEM::RESERVED::ENG USE ONLY::TRACE::TRACE ADDRESS 6	0x0000	>0000		0	65535	NOCFG	RI
436	c4	::SYSTEM::RESERVED::ENG USE ONLY::TRACE::TRACE ADDRESS 7	0x0000	>0000		0	65535	NOCFG	RI
437	c5	::SYSTEM::RESERVED::ENG USE ONLY::TRACE::TRACE ADDRESS 8	0x0000	>0000		0	65535	NOCFG	RI
772	lg	::SYSTEM::RESERVED::ENG USE ONLY::TRACE::TRACE INDEX	0x0000	>0000		0	65535	NOCFG	RO
426	bu	::SYSTEM::RESERVED::ENG USE ONLY::TRACE::TRACE MODE	1	1		0	2	NOCFG	RI
243	6r	::SYSTEM::SOFTWARE INFO							
785	lt	::SYSTEM::SOFTWARE INFO::60Hz DEFAULTS	FALSE	0	FALSE; TRUE;	0	1	NOCFG	RO
782	lq	::SYSTEM::SOFTWARE INFO::620 VERSION	Odd Ball	-3712		0	0	NOCFG	RO
152	48	::SYSTEM::SOFTWARE INFO::CHASSIS TYPE	0	0		4	10	NOCFG	RO
150	46	::SYSTEM::SOFTWARE INFO::CO-PRO PRESENT	FALSE	>0000	FALSE; TRUE;	0	1	NOCFG	RO
781	lp	::SYSTEM::SOFTWARE INFO::CO-PRO TYPE	0	>0000		0	1	NOCFG	RO
133	3p	::SYSTEM::SOFTWARE INFO::DRIVE RATING RMS	0.0 AMPS	0		0.1	3000	NOCFG	RO
151	47	::SYSTEM::SOFTWARE INFO::MID VOLTS	FALSE	>0000	FALSE; TRUE;	0	1	NOCFG	RO
226	6a	::SYSTEM::SOFTWARE INFO::P1 VERSION	NOT PRESENT	10312		0	0	NOCFG	RO
0	0	No Text	Odd Ball	0		0	65535	RECFG	RO
1	1	No Text	0	0		0	65535	RECFG	RO
2	2	No Text							
3	3	No Text							
30	0u	No Text	0.000 VOLTS	0		-10	10	NOCFG	RO
73	21	No Text	0.10 SECS	0.1		0.01	60	RECFG	RW
79	27	No Text	0.00%	0		-100	100	RECFG	RW
84	2c	No Text	TRUE	>0001	FALSE; TRUE;	0	1	NOCFG	RW
141	3x	No Text	0.00%	0		-200	200	NOCFG	RO
156	4c	No Text	0.75 kW 380-460v	0		0	28	NOCFG	RO
165	4l	No Text	0	0		0	65535	RECFG	RO
213	5x	No Text	0	0		0	800	RECFG	RW
214	5y	No Text	0	0		0	800	RECFG	RW
215	5z	No Text	0	0		0	800	RECFG	RW
216	60	No Text	0	0		0	800	RECFG	RW
220	64	No Text	0	0		0	65535	RECFG	RO
231	6f	No Text							
334	9a	No Text	0	0		0	65535	RECFG	RO
429	bx	No Text	FALSE	>0000	FALSE; TRUE;	0	1	NOCFG	RI
438	c6	No Text	0x0000	>0000		0	65535	NOCFG	RI
439	c7	No Text	0x0000	>0000		0	65535	NOCFG	RI
440	c8	No Text	0x0000	>0000		0	65535	NOCFG	RI
441	c9	No Text	0x0000	>0000		0	65535	NOCFG	RI
442	ca	No Text	0x0000	>0000		0	65535	NOCFG	RI
443	cb	No Text	0x0000	>0000		0	65535	NOCFG	RI
444	cc	No Text	0x0000	>0000		0	65535	NOCFG	RI
445	cd	No Text	0x0000	>0000		0	65535	NOCFG	RI
449	ch	No Text	0	0		0	65535	RECFG	RO
496	ds	No Text	0.00%	0		0	100	RECFG	RW
513	e9	No Text	0	0		0	65535	RECFG	RO
514	ea	No Text	0	0		0	65535	RECFG	RO
515	eb	No Text	0	0		0	65535	RECFG	RO
517	ed	No Text	1.00%	1		-100	100	RECFG	RW
518	ee	No Text	TRUE	>0001	FALSE; TRUE;	0	1	RECFG	RW
519	ef	No Text	FALSE	>0000	FALSE; TRUE;	0	1	RECFG	RW
520	eg	No Text	0	0		0	65535	RECFG	RO
526	em	No Text	0.10 SECS	0.1		0.01	60	RECFG	RW
642	hu	No Text	0	0		0	65535	RECFG	RO
645	hx	No Text	0	0		0	65535	RECFG	RO
747	kr	No Text	0	0		0	65535	RECFG	RO
748	ks	No Text	0	0		0	65535	RECFG	RO
749	kt	No Text	0	0		0	65535	RECFG	RO
750	ku	No Text	0	0		0	65535	RECFG	RO
751	kv	No Text	0	0		0	65535	RECFG	RO
752	kw	No Text	0	0		0	65535	RECFG	RO
753	kx	No Text	0	0		0	65535	RECFG	RO
754	ky	No Text	0	0		0	65535	RECFG	RO
755	kz	No Text	0	0		0	65535	RECFG	RO
756	l0	No Text	0	0		0	65535	RECFG	RO
757	l1	No Text	0	0		0	65535	RECFG	RO
758	l2	No Text	0	0		0	65535	RECFG	RO

Tag	Mn	Text	Defau	EIASCI	Enum	Min	Max	CFG	RO
759	l3	No Text	0	0		0	65535	RECFG	RO
760	l4	No Text	0	0		0	65535	RECFG	RO
775	lj	No Text	0	0		0	65535	RECFG	RO
792	m0	No Text	0	0		0	65535	RECFG	RO
793	m1	No Text	0	0		0	65535	RECFG	RO
794	m2	No Text	0	0		0	65535	RECFG	RO
795	m3	No Text	0	0		0	65535	RECFG	RO
796	m4	No Text	0	0		0	65535	RECFG	RO
797	m5	No Text	0	0		0	65535	RECFG	RO
798	m6	No Text	0	0		0	65535	RECFG	RO
799	m7	No Text	0	0		0	65535	RECFG	RO

ISS.	MODIFICATION	ECN No.	DATE	DRAWN	CHK'D
1	Initial issue of HA463584 replaces HA463076. Additions and corrections for S/W Release 4.X. Revisions to Chapter 1 to provide clarification/corrections for UL (c-UL) Listing requirements. Page 3-16 added “Watt Loss” column. Page 1-11 changed Block 10 references from “Filters” to “Aux Supply”.	12362 12329 12419 11945 11965	05.02.98	FEP	RM
2	Page 1-5 added to Analogue I/O, INPUT, Sample Rate, “(1.76mS for ... upwards.)” Page 1-6 added/changed to Encoder Supply Output, Output Voltage:- Changed: 15 - 21V to 10 - 21V Added: “The output ... Supply.” Page 1-9 first sentence added “HA463284”. Page 5-6 AUX. I/O replaced MMI Entries. Added section called Remote Sequencing. Appendix 9 replaced MMI Listing and Tag Listing for Release 4.4 Listings.	12729	05.05.98	FEP	RM
3	Added correct EC Declaration of Conformity. Other minor amendments and corrections.	13015	08.10.98	FEP	MC
4	Replaced prEN50178(1995) with EN50178(1998) and updated EC Declaration of Conformity. Page 2-10 removed 'Note' and added (only 4 wire 486 is supported). Page 2-11 Added "Not Supported" to 2-Wire and corrected Switch 8 to Switch 9 Page 3-2 Replaced Nema with UL Type 1. Page 4-7 Corrected A, A, B and B to A, A, and B, B, Page 5-8 Corrected "Wait for/Alarm" to "Healthy Output Bit 11". ACK ALARM changed BIT 5 to 8. REMOTE TRIP ALARM changed 789 to 790 and 790 to 789 and Bit 6 to Bit 9 Page 9-4 Added SECS after Remote Delay 790. Figure 2.5 added Encoder information. Page 3-25 added Encoder Connections and Recommendations.	13114 13227 13283	04.02.99	FEP	CM

FIRST USED ON

MODIFICATION RECORD

620 Standard/Com/Link User Manual

File Name: P:\Vector\docs\manual

EUROTHERM DRIVES

DRAWING NUMBER

ZZ 463584 C

SHT.1

OF 2

ISS.	MODIFICATION	ECN No.	DATE	DRAWN	CHK'D
5	Page 1-1 added "Important: Motors used must be suitable for inverter duty".	13715	13.12.1999	FEP	RM
	Page 1-2 re-drawn figure 1, so will be visible when pdf files are generated.				
	Page 1-3 corrected output frequency from 400 to 240 and added (for higher frequencies contact ... support).	13996			
	Page 1-12 Block 9 replaced (standard) with (recommended).				
	Page 2-7 Replaced 620Adv with 620 Com.				
	Page 3-9 Removed "All 620 units are supplied without braking resistors by default".				
	Page 3-18 added "Note: You must fit the 620 .... the duct".	13591			
	Removed pages 5-69 to 5-80 Profibus information and added to Profibus manual HA389815.	13907			
	Page 7-6, 7, 8 and 9 Replaced Certificates and corrected footer information.	13908			
	Page 8-1 added information on Disposal and Packaging. Replaced prEN50178(1995) with EN50178(1988)				
	Page 9-1 reworded sentence from "Recommended choke values for cables up to 500m" to "Recommended choke values for cables over 50m".	13779			
	Pages 9-4 to 9-8 Replaced MMI Listing release 4.4 with 4.8.				

FIRST USED ON

File Name: P:\Vector\docs\manual

MODIFICATION RECORD

620 Standard/Com/Link User Manual

EUROTHERM DRIVES

DRAWING NUMBER

ZZ 463584 C

SHT.2

OF 2

GA387648C016 ISSUE C 03.10.94

This page is intentionally left blank